Tequipment.NET USA
205 Westwood Ave
Long Branch, NJ 07740
1-877-742-TEST (8378)
Fax: (732) 222-7088
salesteam@Tequipment.NET

PART No. CWSC424NK

Data subject to change without notice

Isometric drawing Not to Scale

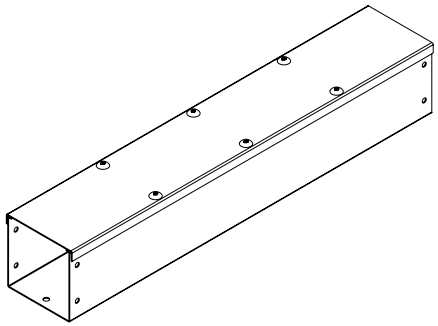

ISOMETRIC VIEW

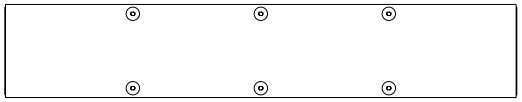

TOP VIEW

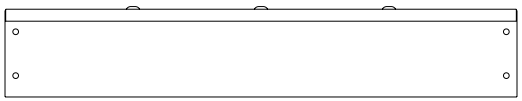

BACK VIEW

SIDE VIEW

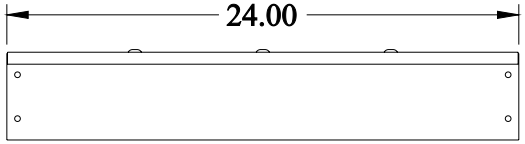

FRONT VIEW

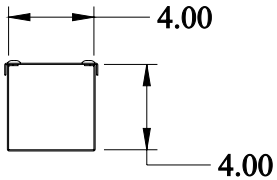

SIDE VIEW

BOTTOM VIEW