FLUKE networks

990DSL

CopperPro Series II Broadband Loop Tester

Users Guide

August 2006, Rev. 1, 2/07

LIMITED WARRANTY & LIMITATION OF LIABILITY

Each Fluke Networks product is warranted to be free from defects in material and workmanship under normal use and service. The warranty period for the mainframe is one year and begins on the date of purchase. Parts, accessories, product repairs and services are warranted for 90 days, unless otherwise stated. Ni-Cad, Ni-MH and Li-Ion batteries, cables or other peripherals are all considered parts or accessories. The warranty extends only to the original buyer or end user customer of a Fluke Networks authorized reseller, and does not apply to any product which, in Fluke Networks' opinion, has been misused, abused, altered, neglected, contaminated, or damaged by accident or abnormal conditions of operation or handling. Fluke Networks warrants that software will operate substantially in accordance with its functional specifications for 90 days and that it has been properly recorded on non-defective media. Fluke Networks does not warrant that software will be error free or operate without interruption.

Fluke Networks authorized resellers shall extend this warranty on new and unused products to end-user customers only but have no authority to extend a greater or different warranty on behalf of Fluke Networks. Warranty support is available only if product is purchased through a Fluke Networks authorized sales outlet or Buyer has paid the applicable international price. Fluke Networks reserves the right to invoice Buyer for importation costs of repair/replacement parts when product purchased in one country is submitted for repair in another country.

Fluke Networks warranty obligation is limited, at Fluke Networks option, to refund of the purchase price, free of charge repair, or replacement of a defective product which is returned to a Fluke Networks authorized service center within the warranty period.

To obtain warranty service, contact your nearest Fluke Networks authorized service center to obtain return authorization information, then send the product to that service center, with a description of the difficulty, postage and insurance prepaid (FOB destination). Fluke Networks assumes no risk for damage in transit. Following warranty repair, the product will be returned to Buyer, transportation prepaid (FOB destination). If Fluke Networks determines that failure was caused by neglect, misuse, contamination, alteration, accident or abnormal condition of operation or handling, or normal wear and tear of mechanical components, Fluke Networks will provide an estimate of repair costs and obtain authorization before commencing the work. Following repair, the product will be returned to the Buyer transportation prepaid and the Buyer will be billed for the repair and return transportation charges (FOB Shipping point).

THIS WARRANTY IS BUYER'S SOLE AND EXCLUSIVE REMEDY AND IS IN LIEU OF ALL OTHER WARRANTIES, EXPRESS OR IMPLIED, INCLUDING BUT NOT LIMITED TO ANY IMPLIED WARRANTY OR MERCHANTABILITY OR FITNESS FOR A PARTICULAR PURPOSE. FLUKE NETWORKS SHALL NOT BE LIABLE FOR ANY SPECIAL, INDIRECT, INCIDENTAL OR CONSEQUENTIAL DAMAGES OR LOSSES, INCLUDING LOSS OF DATA, ARISING FROM ANY CAUSE OR THEORY.

Since some countries or states do not allow limitation of the term of an implied warranty, or exclusion or limitation of incidental or consequential damages, the limitations and exclusions of this warranty may not apply to every buyer. If any provision of this Warranty is held invalid or unenforceable by a court or other decision-maker of competent jurisdiction, such holding will not affect the validity or enforceability of any other provision.

4/04

Fluke Networks

PO Box 777

Everett, WA 98206-0777

USA

Table of Contents

List of Tables

List of Figures

Chapter 1
Introduction

Using This Guide

This *990DSL CopperPro Series II Broadband Loop Tester Users Guide* shows you how to operate the 990DSL CopperPro Series II Broadband Loop Tester (hereafter referred to as the “CopperPro”, “990”, or “tester”). It provides instructions for configuring the CopperPro and using it to precisely locate common faults on a loop and to verify the ability of a copper loop to transport various classes of high-speed data services.

This guide is intended for users who want to start using the CopperPro immediately with minimal instruction. It describes the main features of the tester and explains how to set up, operate, and care for it. For your protection, it is important that you observe all warnings and important safety information in this guide and on the tester itself.

Introduction

The 990DSL CopperPro Series II Broadband Loop Tester is a portable, battery-operated handheld tester that is used for cable installation testing, fault location, and digital service qualification of outside plant (OSP) paired copper cables.

As a cable installation test tool, you can use the CopperPro with an external multiple-pair access module in a PC-controlled mode to perform automated, single-ended conformance testing of a newly installed cable according to operating company guidelines. If more rigorous conformance testing is required, you can use a second CopperPro with a multiple-pair access module at the far end of the cable to perform precision-terminated transmission testing.

As a fault location test tool, you can use the CopperPro to precisely locate common physical cable faults, including shorts, grounds, crosses, opens, splits, and pair imbalances that are caused by poor splice joints. The tester can also be used to expose corroded metallic faults on unused pairs. This type of problem, which is virtually undetectable by conventional meters, can eventually cause a pair to be noisy after it is cut into service.

The CopperPro is also a useful tool for helping you find the root cause of transmission problems, such as excessive loss and noise. Additionally, it can detect and identify loop treatment and fault-sectionalizing devices that are commonly installed on lines, such as range extenders (REGs), Network Interface Devices (NIDs), and Maintenance Termination Units (MTUs).

As a digital service qualification test tool, you can use the CopperPro to verify that a cable pair is suitable for voice frequency POTS services (such as Caller ID and analog modem data) and for special services, such as DDS, ISDN, T1, HDSL, HDSL2, HDSL4, ADSL, ADSL2, ADSL2+ and VDSL. The CopperPro uses voiceband, wideband, and broadband loss, Gaussian noise, impulse noise, and crosstalk measurements, as well as load coil detection and location capability to qualify copper pairs for these high-speed services.

Design Highlights and Features of the CopperPro

The CopperPro's design and performance features are highlighted below.

Physical Features

- Rugged, wide-temperature design that is specifically made for the harsh OSP environment
- Lightweight and compact in size (4 lbs.)
- Replaceable internal option board for functional scalability
- High contrast, sunlight-readable graphics display with a backlight
- Large, tactile keys that provide an audible response when pressed
- High capacity, rechargeable battery pack that provides a full eight hours of operation
- Modular field-replaceable test leads (one shielded pair for Broadband tests, one unshielded pair for Voiceband and Wideband tests, and Ground)
- Highly functional softcase, with integral test lead compartment and front pouch for housing test module appliqués.

User Interface Features

- One-button "test suite" menu for automated high-level testing
- Comprehensive "toolbox" menu for individual, in-depth testing
- Context-sensitive softkeys that provide easy navigation
- Graphic pictorial test setup and results display for easy interpretation
- Graphical loss, noise, and SNR displays with a scrolling cursor

- Continuous test result mode with large numerals and a relative-change scale for marking and recording peak signal excursions
- Remote control operation and program download capability through a serial port
- Test result storage and printout
- User-settable fault limits with industry-standard defaults.
- Test result upload in either column or tab-delimited format (for direct import to spreadsheet program)

Testing Features

- Integrated far-end-device control for automated, terminated testing
- Double-ended "same-pair testing" capability (requires no control pair)
- AC/DC Voltage, Shorts & Grounds, Opens, Leakage, and Resistance Fault Location (RFL) physical tests
- Load Coil, Noise, Loss, SNR, and Longitudinal Balance transmission tests
- Impulse Noise test with E, F, and G filters
- Voiceband (0 – 20 kHz), Wideband (10 kHz – 1.2 MHz), and Broadband (1.2MHz – 20 MHz) transmission tests
- PSD mask overlays that depict crosstalk patterns for common types of interference
- Quick, Single-ended ADSL DSLAM / modem verification, with data rate prediction
- Single-ended ADSL/2/2+ DSLAM Line test (requires 990-GM/2 ADSL2+ Golden Modem appliqué).
- Single-ended VDSL DSLAM Line test (requires 990-GM/V VDSL Golden Modem appliqué)

Automated dial-up testing that is compatible with a variety of central office (C.O.) tone-sending equipment

- Full TDR capability with Auto-Test waveform interpretation software
- Tracing Tone, Monitor, and a fully integrated Dial Set operation
- Caller ID and automatic number ID (ANI) tests
- Non-intrusive “footprint analysis” of service types on working pairs

Safety Information

The CopperPro is intended for use by qualified personnel only. The tester is designed for use with circuits that have a maximum of 350 VDC or peak AC, line-to-line or line-to-ground. Do not move the CopperPro from pair to pair while in a continuous testing mode, to prevent damage to the unit.

The following general safety precautions must be observed during all phases of operation, service, or repair of the CopperPro. Failure to comply with these precautions or with specific warnings in this guide violates the safety standards of design, manufacture, and intended use of the tester. Fluke Networks assumes no liability for the customer’s failure to comply with these requirements.

⚠Warnings

- **If this product is used in a manner not specified by the manufacturer, the protections provided by the product may be impaired.**
- **Never connect the CopperPro to a circuit when lightning storms are nearby.**
- **Do not open the case. There are no user-serviceable parts inside.**

⚠Warnings

- **Should the LCD become damaged, the liquid crystal material can leak. Avoid all contact with this material, especially swallowing. Use soap and water to thoroughly wash all skin and clothing contaminated with the liquid crystal material.**
- **When using an AC power source, use only the supplied AC Adapter/Charger to power or charge the CopperPro.**
- **Do not use the CopperPro if it operates abnormally. Protection may be impaired.**
- **Inspect the CopperPro before using. Do not use it if it is damaged.**
- **When servicing the CopperPro, use specified replacement parts only.**
- **This product is not intended to be used to measure mains voltages (CAT I, II, III or IV) and should only be connected to powered circuits where over-voltage protections have been incorporated.**

Table 1-1 describes the international electrical symbols that are found on the CopperPro and used in this guide.

Table 1-1. International Electrical Symbols

Symbol	Meaning
	Warning: Risk of electric shock.
	Important Information. See specific explanations where this symbol is displayed in this guide.
	Equipment is protected by double insulation or reinforced insulation to protect the user against electric shock.
	Battery should be recycled.
	Do not mix with solid waste stream. Dispose using a qualified recycler or hazardous material handler.
	Conforms to the requirements of the European Union and European Free Trade Association (EFTA).
	Canadian Standards Association. Conforms to relevant safety standards in Canada and the United States.
	This instrument contains a Nickel Metal Hydride battery pack. Fluke Networks subscribes to the U. S. Rechargeable Battery Recycle Corporation (RCRB) program. Contact your authorized Fluke Networks Service Center for recycling information.

Care and Maintenance

The CopperPro is designed to be maintenance free. Treat it with care to ensure the best performance. The suggestions below will help you to fulfill the obligations of the warranty and enjoy the tester for many years.

- Avoid rough handling

  Although the CopperPro is designed for use in the rugged OSP environment and can absorb a generous amount of shock and vibration, avoid dropping the tester. If you must ship the tester, use the original packaging.

- Clean carefully

  The plastic casing for your CopperPro has a finish that should retain its durability for many years. To clean the tester, use a soft, slightly damp cloth. To remove any stains, use a mild soap. Never use detergents, solvents, or abrasive cleaners on the tester.

Service and Adjustment

Service and adjustment of the CopperPro should be performed by trained Fluke Networks service personnel only.

If you experience a problem with the CopperPro, visit the Fluke Networks Web site at www.flukenetworks.com. Click **Support** to display the **Support Solutions** page. You can also send email to support@flukenetworks.com or call one of the following numbers to report a problem:

- USA: 1-888-99-FLUKE (1-888-993-5853)
- Canada: 1-800-363-5853
- Europe: 00800 632 00 or +44 1923 281 300
- Beijing: 86 (10) 6512-3435
- Japan: +81-3-3434-0181
- Singapore: +65-6738-5655
- Anywhere in the world: +1-425-446-4519

Visit our website for the latest list of phone numbers.

If the CopperPro requires repair, service center personnel will provide you with shipping information and repair prices. If the CopperPro is covered under warranty, it will be promptly repaired or replaced (at Fluke Network's option) and returned to you, postage paid, at no charge. See the registration card for warranty terms. If the warranty has lapsed, Fluke Networks will repair the CopperPro for a fixed fee and return it, postage paid, to you.

Checking the Shipping Container

Remove the items from the shipping container and check that the package contains all of the standard accessories in the following list. Match each item with those shown in Figure 1-1. If any item is missing or damaged, contact your place of purchase.

- 990DSL CopperPro Series II Broadband Loop Tester
- NiMH Rechargeable Battery Pack (installed; PN 665083)
- Softcase
- Power Supply INTL
- Shoulder Strap
- RS-232 Cable
- 12V Vehicle Battery Charger/Adapter
- Line Cord (as appropriate for the country of usage)
- Shielded Pair 1 Test Lead Set
- RFL Strapping Cord
- Wire Gauge (not shown)
- This User's Guide (not shown)
- Warranty Registration Card (not shown)

For a list of replacement parts and optional accessories that you can order for your CopperPro, see Appendix B.

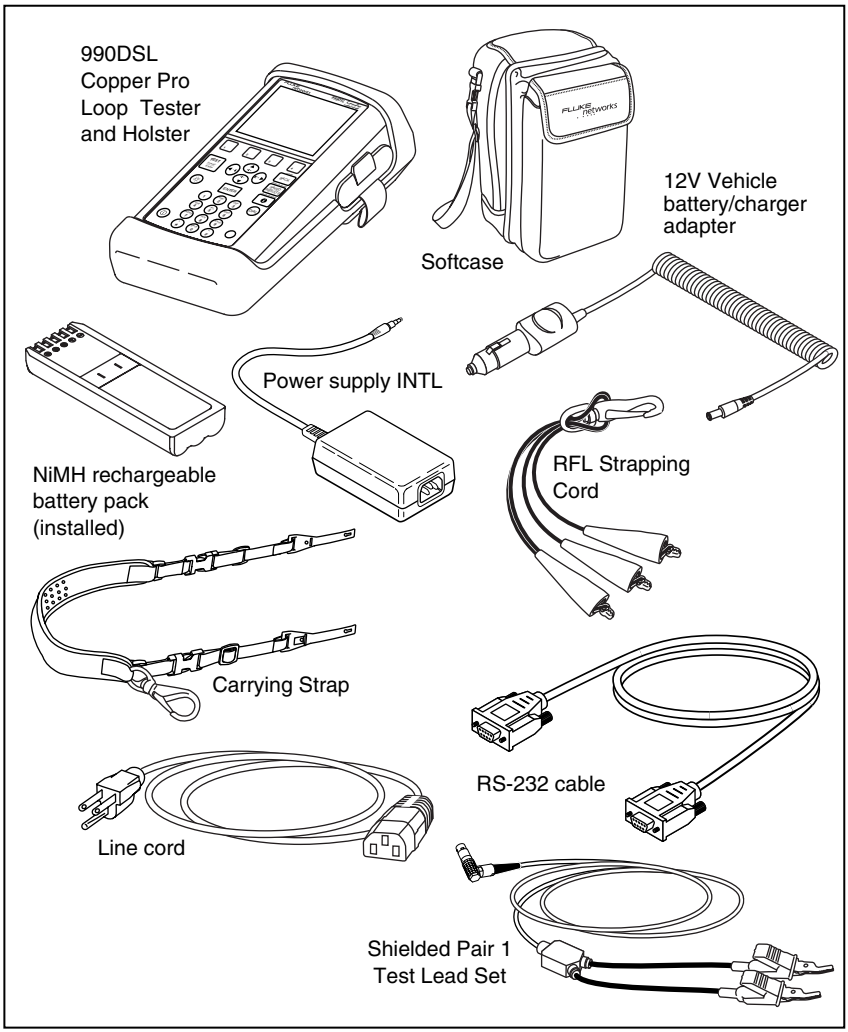

elf75f.eps

Figure 1-1. Standard Accessories

Technical Support

Fluke Networks offers a variety of support options to help you get the most from your CopperPro. If you require technical support, please have the following information available:

- Your name and company
- Model number and serial number of the CopperPro
- A description of the problem and any error messages that appear on the LCD.

For application or operation assistance or information about the tester, you can send email to support@flukenetworks.com or call one of these numbers:

For operating assistance in the USA, call 1-800-28-FLUKE (1-800-283-5853). This number is for Technical Support in theUS only.

To order accessories or to find out the location of the nearest Fluke Networks distributor or service center, call:

- USA: 1-888-99-FLUKE (1-888-993-5853)
- Canada: 1-800-363-5853
- Europe: 00800 632 00 or +44 1923 281 300
- Beijing: 86 (10) 6512-3435
- Japan: +81-3-3434-0181
- Singapore: +65-6738-5655
- Anywhere in the world: +1-425-446-4519

Visit our website for the latest list of phone numbers.

You can also visit the Fluke Networks Web site at www.flukenetworks.com. Click **Support** to display the **Support Solutions** page.

Chapter 2
Controls and Connections

Introduction

This chapter describes the physical layout of the CopperPro. The chapter begins with an overview of the tester's front, side, and back panels so that you know where the various controls and connectors are located and so that you can familiarize yourself with the functions of the keys and indicators. You will then learn how to connect the CopperPro to an external power supply and a printer and how to charge the tester's internal battery pack.

The CopperPro Loop Tester: at a Glance

This section acquaints you with the physical layout of the CopperPro.

Front Panel

Figure 2-1 identifies the elements on the tester's front, top, and side panels. Following the figure are descriptions of the numbered items in the illustration.

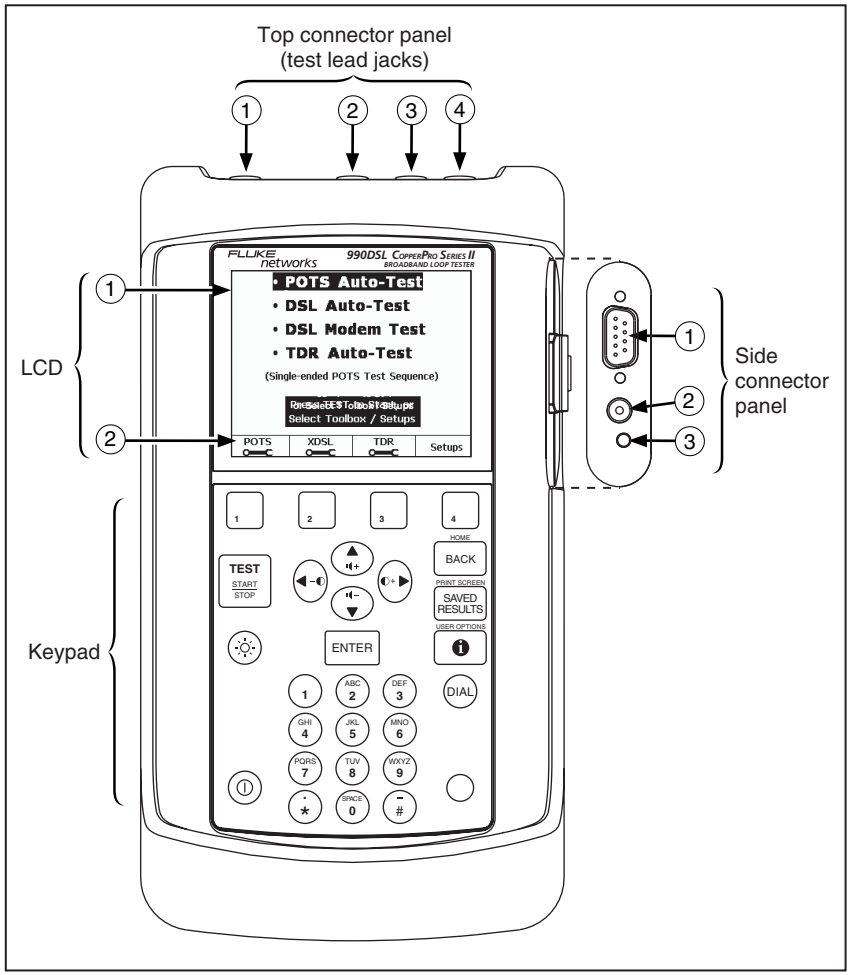

elf02f.eps

Figure 2-1. Top, Front, and Side Panels

LCD

The LCD is a shock-mounted, sunlight-readable, ¼-VGA (320 x 240 pixel) graphic Liquid Crystal Display. A low-power Electro-luminescent (EL) module provides backlighting to the LCD.

The LCD has two areas:

- Display area (item ①)

  This area displays the prompts, test and setup menus, test results, and messages.

- Four softkey labels (item ②)

  These labels identify the screen-dependent function keys. To activate a function, press its softkey (1, 2, 3, or 4), which is located on the tester's keypad directly below the label.

Keypad

The keypad is a sealed, waterproof membrane that has 29 keys. Table 2-1 describes the function of each key.

Table 2-1. Functions of the CopperPro Keys

Key	Function
1 2 3 4	Four rectangular numbered keys that are located directly under the LCD. These are software-defined keys (called "softkeys") that carry out commands related to the currently displayed screen. To locate the function of a key, look on the LCD directly above the key.
TEST START STOP	Starts the selected test and stops the currently running test.

Table 2.1. Functions of the CopperPro Keys (continued)

Key	Function
☼	Turns the LCD's backlight on or off.
⏻	Turns the CopperPro on or off.
◯	Shift key (yellow). Some keys have two functions (for example, the **BACK** key). When you press and release the Yellow Shift key, then press a key that has two functions, the alternate function of the key is activated. The alternate function is printed in yellow letters above the key.
DIAL	Causes the CopperPro to go "off-hook" on the T & R test leads and function as a telephone dial set. Hangs up when this key is pressed again.
USER OPTIONS ⓘ	Press ◯ then ⓘ to display the **USER OPTIONS** menu.
PRINT SCREEN SAVED RESULTS	Has two functions: • Press SAVED RESULTS to access stored results files. • Press ◯ then SAVED RESULTS to print the contents of the currently displayed screen.

Table 2-1. Functions of the CopperPro Keys (continued)

Key	Function
HOME BACK	Has two functions: • Press BACK to return to the previously displayed screen. • Press ◯ then BACK to display the **Main** menu (see Figure 3-2).
	Four directional arrow keys have the following functions: • To select a test or edit a parameter, press an arrow key to move the cursor in the direction in which the arrow points (up, down, left, or right). • Press ◯. Then press ◀ to decrease or ▶ to increase the contrast of the LCD. • Press ◯. Then press ▲ to increase or ▼ decrease the volume of the speaker.
ENTER	Does the following: • Selects test options. • Exits Edit mode
Alphanumeric Keys	Provide a 12-key telephone pad so that you can enter numbers, the asterisk (*), and pound sign (#). Press ◯, then press the associated number key to select an alphabetic character, the decimal, space, or dash. Press ◯ again to exit alphabetic entry mode and return to number entry mode. *Note* *To display an alphabetic character, press ◯, then continue to press the associated number key until the desired alphabetic character appears.*

Top Connector Panel

The top connector panel has one shielded dual test lead connector and three 2 mm single test lead connectors. These connectors are color-coded for easy identification. The test lead connectors are identified in Figure 2-1 as follows:

1. Tip/Ring shielded test cable (black/red)
2. Ground test lead (green)
3. Tip 1 test lead (yellow)
4. Ring 1 test lead (blue)

Side Connector Panel

The side connector panel is protected from rain by a tethered plug that is attached to the holster. This panel has the following components, which are identified in Figure 2-1:

- RS-232 port (item 1)

  A nine-pin male D-Sub connector with locking nuts. The RS-232 port and the supplied RS-232 cable are needed when you download programs from a PC to the tester and when you control the tester remotely from a PC. With a printer cable connected, the RS-232 port enables you to print serial data. This port also controls the optional 990-GM/2 and 990-GM/V Golden Modem appliqués.

- DC power jack (item 2)

  A barrel jack that is used to power the tester externally and charge the battery. This jack accepts a 12-15 VDC center-positive voltage that is provided either by the supplied AC power supply or by the optional Vehicle Power Cord.

- Charging status LED (3)

  A bicolor (red and green) LED that indicates the charging status of the internal battery pack (see “Charging the Battery” for details).

Back Panel

The tester's back panel is shown in Figure 2-2. This panel contains a speaker (item ①) and a microphone (item ②). The speaker and microphone enable you to use the CopperPro as a dial set (see "Operating the Tester as a Dial Set" in Chapter 3 for instructions).

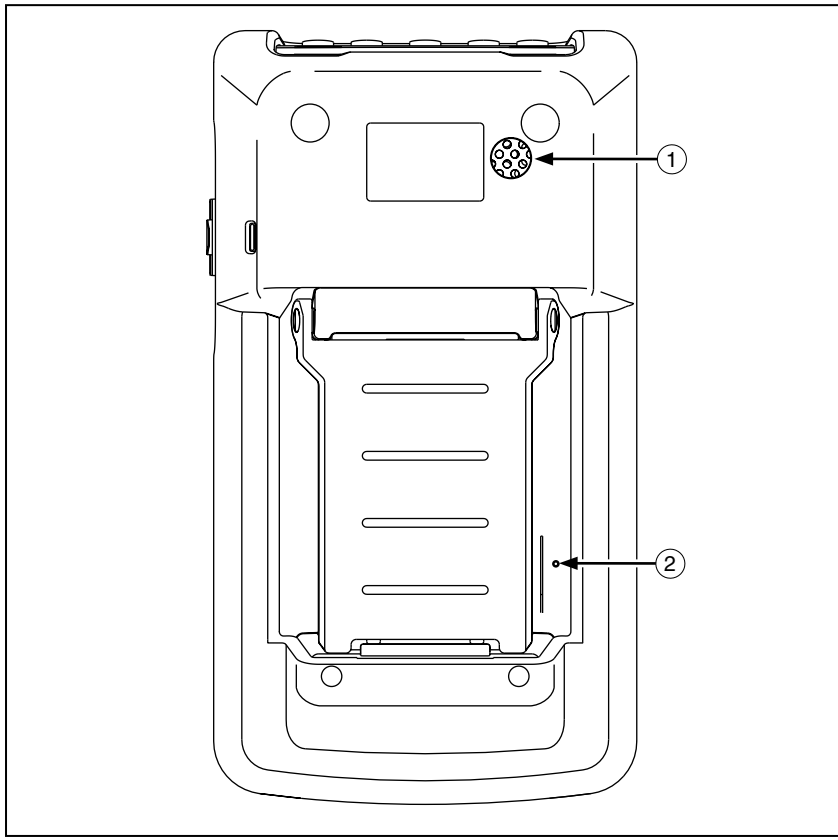

acy04f.eps

Figure 2-2. Back Panel

Connecting the CopperPro

This section shows you how to connect the CopperPro to AC power, an automobile battery, a printer, and a PC.

Connecting to AC Power

When the tester is connected to AC power, you can use the power supply as a continuous power source. In this way, you can test for long periods of time without depleting the tester's batteries.

To connect the CopperPro to AC power, follow these steps:

1. Plug the AC power cord into an AC outlet.
2. Connect the power cord DC Barrel plug into the DC connector. This connector is located on the tester's side panel (see Figure 2-1).
3. Do one of the following:
   - Turn off the tester to begin charging (see "Charging the Battery" for details).
   - Turn on the tester and begin using.

Connecting to an Automobile Battery

To connect the CopperPro to a 12 VDC automobile battery, follow these steps:

1. Plug the male cigarette lighter plug on the Vehicle Power Cord into the vehicle lighter socket.
2. Connect the DC barrel plug on the Vehicle Power Cord into the DC connector. This connector is located on the tester's side panel (see Figure 2-1).
3. Do one of the following:
   - Turn off the tester to begin charging.
   - Turn on the tester to begin using.

Connecting to a Printer

To connect the CopperPro to a serial graphics printer, do the following:

1. Attach the nine-pin female connector on the optional printer cable to the CopperPro D-Sub connector.
2. Attach the nine-pin male cable connector to the printer.

Connecting to a PC

If the CopperPro is connected to a PC, you can download and upload files and control the tester remotely from the PC. To connect the CopperPro to a PC, do the following:

1. Attach one end of the supplied RS-232 cable to the RS-232 port, which is located on the tester's side panel (Figure 2-1).
2. Attach the other end of the supplied RS-232 cable to an available port on the PC.

The Battery

The CopperPro operates on a replaceable NiMH battery pack. The battery typically provides between 16 to 24 hours of operating time. This section shows you how to check and recharge the battery.

Checking the Remaining Battery Capacity

To find out what the remaining capacity of the internal battery pack is, do the following:

1. Press ◯ then [ℹ] to display the **USER OPTIONS** menu.

2. Select **Battery Status**, then press [ENTER].

   The **Battery Status** screen is displayed. This screen gives you the following information about the internal battery pack:

   - Battery voltage (VDC)
   - Battery capacity (%)
   - Estimated remaining run-time (in hours, based on normal usage)
   - Battery temperature (°C)

   Note

   After you turn on the tester, the startup screen displays this same status information about the battery.

   In the upper right corner of the screen, the tester displays two icons, which indicate the following:

   - External power source in use (either AC power or not AC power)
   - Battery capacity.

Responding to Low Battery Warnings

When the NiMH battery pack has about 30 minutes of operating time remaining, the tester issues a tone and displays a low-battery warning on the LCD. This warning overlays the currently displayed screen.

Note

To remove the warning, press [ENTER].

If the low battery warning appears while you are operating the tester, it is advisable to connect the CopperPro to an external power source within the next several minutes to guarantee that the currently displayed test data is not lost due to a power failure. If you continue to operate the CopperPro without an external power source, the tester issues a final distinctive audible tone and then powers itself off.

Charging the Battery

To charge the battery, either connect the CopperPro to AC power (see "Connecting to AC Power") or connect it to an automobile battery (see "Connecting to an Automobile Battery").

During operation from either external power source, the battery receives a "trickle" charge that allows you to operate the tester for extended periods of time without discharging the internal battery pack. When the CopperPro is connected to an external power source but turned off, the battery automatically undergoes a fast-charging cycle.

A full charging cycle can take between two to three hours to complete. The charging status LED on the side connector panel indicates the state of the battery charge as one of the following:

- Flashing red: indicates that the battery is being prepared for fast charging, and is in the "pre-charge" mode. This state lasts for several minutes before the battery enters fast charging mode. This state will be extended for extremely low voltage, low temperature, or high temperature battery conditions, with the fast charge mode beginning when the battery has reached the proper voltage and temperature range.

- Steady red: indicates that the battery is in fast-charging mode. In this mode, it can take up to three hours for a completely discharged battery pack to charge.
- Steady green: indicates that the battery is in the final stages of charging. The first stage, which typically lasts for about 30 minutes, occurs after the fast-charging mode is the “top off” state. The final stage is the “trickle charge” state. In this state, the battery is fully charged. The CopperPro can be left in the trickle charge state for an indefinite period of time, without harm.

Note

Do not attempt to charge the battery at extremely low temperatures (see Appendix A).

Discharging Battery

To properly discharge the battery, you can leave the tester on until the battery drains or you can use the “Deep Discharge” facility. To use the discharge facility, complete the following:

1. Press ◯ then [ⓘ] to display the **USER OPTIONS** menu.
2. Select **Battery Status**, then press [ENTER].
3. Press [TEST start stop].
4. Follow the on-screen instructions to disconnect the tester from the external power source. Then, press [1](**Okay**).
5. Press [TEST start stop].

   The tester begins to discharge the battery.

Chapter 3
Setting Up and Operating the CopperPro

Introduction

This chapter shows you how to set up the CopperPro so that it suits your particular testing needs and operating preferences. The chapter begins with an introduction to the menu system and shows you how to locate desired tests, operational functions, and setup parameters. The chapter concludes by showing you how to perform basic tasks, such as adjusting the speaker volume, changing the contrast and brightness of the LCD, and using the CopperPro to dial a telephone number.

Turning the CopperPro On and Off

To turn on the CopperPro, do the following:

1. Press ⏻. This is the green On/Off key, which is located in the bottom left corner of the keypad (see Figure 2-1).

   The CopperPro startup screen (Figure 3-1) is displayed:

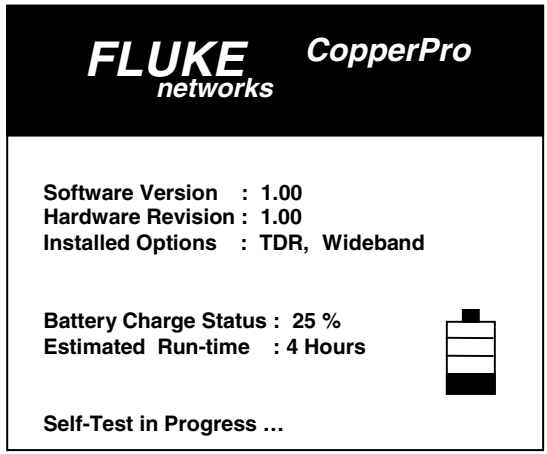

acy03s.eps

Figure 3-1. CopperPro Startup Screen

   The startup screen displays general information about the tester: the software version and hardware revision, installed options (if any), and battery status and estimated remaining run-time.

2. To turn the tester off, press ⏻ again.

Note

Should the tester fail to respond to the "OFF" key function for any reason, force the unit to power down by holding the key down for 5 to 6 seconds.

The Menus

The CopperPro's test selections, setup configurations, and results are accessed through a menu system. This section shows you how to display the **Main** menu. You will then learn how to display the test and setup menus.

Displaying the Main Menu

The **Main** menu is the top-level menu. From this menu, you can access all of the CopperPro's setup and testing functions.

After you turn on the CopperPro, it conducts a series of self-tests, then displays the **Main** menu (Figure 3-2). If the CopperPro is already turned on, you can return to the **Main** menu from anywhere in the menu hierarchy by pressing ◯, then pressing [BACK].

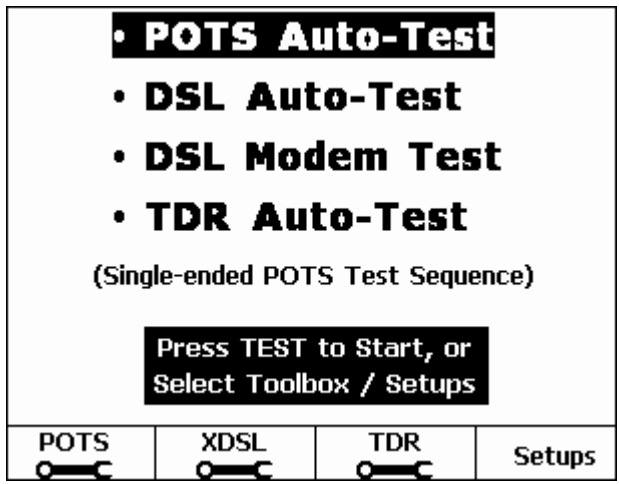

elf05s.bmp

Figure 3-2. Main Menu

From the **Main** menu, you can access the following:

- Auto-Tests

  The menu lists the three automatic tests or Auto-Tests: POTS, DSL, and TDR, plus the DSL Modem Test. Each Auto-Test is comprised of a series of individual diagnostic tests that run automatically and in sequence with the press of a single key. The POTS, DSL, and TDR Auto-Tests are described in detail in Chapters 4, 5, and 6, respectively. The DSL Modem Test is described in Chapter 5.

- "Toolbox" tests

  Each "toolbox" contains a group of functionally related individual tests. The **POTS**, **XDSL**, and **TDR** softkeys, which are located at the bottom of the **Main** menu, each let you access a group of tests. For descriptions of the tests in the POTS, XDSL, or TDR toolbox, see Chapter 4, 5, or 6, respectively.

- Test setup menus

  The **Setups** softkey provides direct access to the setup menu for a selected (highlighted) test. For information on setting up a test, see the setup section for that test in Chapter 4, 5, or 6.

Displaying the Previous Menu or Screen

To display the previously displayed menu or screen, press [BACK].

Displaying a Setup Menu

This section shows you how to display the setup menus for an Auto-Test and a test in a toolbox. For descriptions of the setup parameters found on these menus, see "Generic and Test-Specific Setup Parameters".

Auto-Test Setup Menu

To display the setup menu for an Auto-Test, do the following:

1. From the **Main** menu (Figure 3-1), press ⊕ to select the desired Auto-Test.
2. Press [4] (**Setups**).

   The **Setups** menu for the Auto-Test you selected is displayed.

Toolbox Test Setup Menu

To display the setup menu for a test in a toolbox, do the following:

1. From the **Main** menu, press [1](**POTS**), [2](**XDSL**), or [3](**TDR**).

   A menu of tests in the selected toolbox is displayed.
2. Select the test that you want to set up. Then, press [4](**Setups**).

   The **Setups** menu for the test is displayed.

Generic and Test-Specific Setup Parameters

Figure 3-3 shows a typical setup menu for a toolbox test (VF Noise). Every setup menu has two groups of parameters. At the top of the screen is the first group, which consists of three generic parameters (described in Table 3-1). The parameters are considered "generic" because they apply to *all* of the CopperPro's tests.

You can change the value of a generic parameter from any setup screen (see "Editing the Setup for a Test"). Just be aware that when you save the change, it is stored in the tester's memory and applies to *every* CopperPro test.

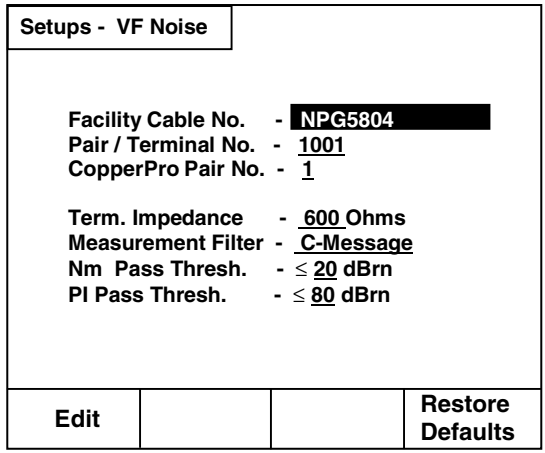

acy07s.eps

Figure 3-3. Typical Setup Menu

Beneath the generic setup parameters is a second group of setup parameters. The parameters in this group are specific to the selected test. Look at the **Setup-VF Noise** screen, which is shown in Figure 3-3. The four parameters on the bottom of the screen apply to the VF Noise test only. For descriptions of the setup parameters for a particular test, refer to the table in the setup section for that test.

Table 3-1. Generic Setup Parameters

Parameter	Description
Facility Cable No.	This number identifies the cable name of the pair on which the test is being conducted. In the highlighted field, supply the alphanumeric cable name (up to 24 characters maximum).
Pair/Terminal No.	This number identifies the specific single cable pair, the cross-box binding post, or the inside terminal number on which the test is being conducted. In the highlighted field, supply the number (five digits maximum).
CopperPro Pair No.	This number identifies the CopperPro test lead pair. In the highlighted field, type a **1** (for **T** & **R)** or a **2** (for **T1** & **R1**, if no external multiple-pair access modules are attached).

Editing the Setup for a Test

To edit the setup for a test, complete the following:

1. To change the value of a generic parameter, refer to the information in Table 3-1 and complete the following for each parameter you want to change:

   a) Press ⊕ or ⊕ to select the parameter. Then, press [1](**Edit**).

   The tester is now in Edit mode.

   b) In the highlighted field, use the keypad to type the desired value. When you finish, press [ENTER].

   The values are saved in the tester's memory and apply to all CopperPro tests until you change them.

2. To change the value of a test-specific parameter, complete the following:

   a) Press ⊕ or ⊕ to select the value you want to change. Press [1](**Edit**).

   The tester is now in Edit mode.

   Note

   Consult Table 3-2, which provides some helpful tips for operating the tester in Edit mode.

   b) Do the following:

   - If the parameter you want to change has a fixed group of choices, press ⊕ or ⊕ until the desired choice appears in the field. Then, press [ENTER] to save the selection.

     OR

   - If the parameter has an alphanumeric field, a blinking cursor appears on the first (left-most) character in the field. To change the parameter's value, use the keypad to type the new value. As you type each character, it appears in the field and the cursor advances to the next position, allowing you type the next character. When you finish, press [ENTER] to save the change.

Table 3-2. Operating the Tester in Edit Mode

If you want to	Do this
Put the tester in Edit mode	Press 1 (**Edit**).
Enter numbers, asterisk (*) or pound sign (#)	Type the values directly from the keypad by pressing the number keys, asterisk (*), or pound sign (#).
Enter alphabetic characters	Press ◯ to put the tester in alphabetic text entry mode. Then, press the key with the desired alphabetic character. Keep pressing the key until the desired alphabetic character is displayed.
Exit alphabetic text entry mode and return to numeric entry mode	Press ◯.
Move the cursor forward one position without changing the displayed character	Press ⊕.
Move the cursor backward one position without changing the displayed character	Press ⊕.
Move the cursor back one position and overwrite the previous character	Press BACK.
Exit Edit mode and save the changes	Press ENTER.
Exit Edit mode, without saving the changes	Press 1 (**Edit**).
Restore factory default setup values	Press 4 (**Restore Defaults**).

Configuring the Tester

This section shows you how to configure the CopperPro so that it functions appropriately for your particular work environment and testing situations. The **USER OPTIONS** menu (Figure 3-4) lists the options available for configuring the tester and customizing it to your needs.

Zero Leads	Phone Numbers	Power-Save Timers	Language & Units
Battery Status	Program Download	RS232 Port Setup	Date / Time
System Version	Company Info.	Saved Results	Self-Test
(Test Lead calibration) Select function, then press Enter; or press System Setups.			
Initialize Bluetooth	Upload Setups	Restore All Defaults	System Setups

acy08s.eps

Figure 3-4. USER OPTIONS Menu

Function Keys

- **Initialize Bluetooth** initializes the optional Bluetooth Communications modules connected to the tester and a PC, for wireless remote control or upload operation.
- **Upload Setups** uploads stored setups to a PC via the serial port.
- **Restore All Defaults** resets all setup options to factory defaults.
- **System Setups** allows entry of operator name, wire center, location, and job number (refer to “Creating a Custom Header for Test Result Files” later in this chapter).

Setting the Date and Time

To set the date and time, follow these steps:

1. Press ◯, then [i] to display the **USER OPTIONS** menu (Figure 3-4).
2. Select **Date/Time**. Press [ENTER].

   The **Date/Time** menu is displayed.
3. Press ⊕ to move the cursor down to the **Time Display Mode** field. Press [1](**Edit**). Then, press ⊕ to select one of the following formats for displaying the time:

   - 12-hour (default)
   - 24-hour

   Press [ENTER] to save your selection.
4. Press ⊕ to move the cursor down to the **Date Display Mode** field. Press [1](**Edit**). Then, press ⊕ to select one of the following formats for the date:

   - MM/DD/YYYY
   - DD.MM.YYYY

   Press [ENTER] to save your selection.
5. Press ⊕ to move the cursor up to the **Current Time** field and set the time. To do this, complete the following:

   a) Press [1](**Edit**). In the Hour field, type the hour. Then press [ENTER] to save the value.

   b) Press ⊕ to move the cursor to the Minutes field. Press [1](**Edit**). Type the minutes, then press [ENTER] to save the value.

   c) If you selected **12-hour** as the time format, press ⊕ to move the cursor to the Time of Day field. Press [1](**Edit**). Press ⊕ to select **AM** or **PM**, then press [ENTER] to save the selection.

6. Press ⊕ to move the cursor to the **Current Date** field and set the date. To do this, complete the following:

   d) Press [1](**Edit**). In the first field, type the number for the current month (or day, if you selected DD.MM.YYYY as the display mode). Press [ENTER] to save.

   e) Press ⊕ to move the cursor to the next field. Press [1](**Edit**). Type the number for the current day (or month), then press [ENTER] to save.

   f) Press ⊕ to move the cursor to the Year field. Press [1](**Edit**). Type the year, then press [ENTER] to save.

Your tester is now programmed with the current time and date.

Setting a Timer to Conserve Power

To conserve battery power, you can program a timer that automatically switches the tester into low-power mode or power-down mode after a specified period of inactivity.

The CopperPro has two timers:

- "Snooze" Timer

  Causes the CopperPro to go into low-power mode if no keypad activity is detected for the user-specified time period. When the time elapses, the tester emits a distinctive tone and the display goes blank.

  Press any key to reactivate the tester and reset the timer.

- "Power Down" Timer

  Causes the CopperPro to automatically turn off if no keypad activity is detected for the user-specified time period. The tester emits distinctive tone when the time elapses and turns itself off.

  Press ⏻ to turn the tester back on.

To set a timer, follow these steps:

1. Press ◯, then [ⓘ] to display the **USER OPTIONS** menu (Figure 3-4).
2. Select **Power-Save Timers**. Press [ENTER].
3. To change a timer's setting, position the cursor on the timer. Then, press [1](**Edit**).
4. Supply the desired period of inactivity. Then, press [ENTER] to save the value.

Note

The default period of inactivity is 10 minutes for the Snooze timer and 20 minutes for the "Power Down" timer.

Selecting a Language and Associated Units of Measure

The CopperPro displays and prints information in the following languages:

- English (U.S., U.K., and Canada)
- Spanish
- French (France and Canada)
- Portuguese (Brazil)
- German
- Danish

The tester also displays length in different units of measure.

When you select a language for the tester's displays, the units of measure associated with that language (and country) are automatically chosen. These include units of measure for temperature, distance, and VF Noise, as well as conductor names and the typical wire gauges that are employed for the language/country you selected.

The default language for the tester's displays is **English (USA)**.

To change the language and associated units of measure, complete the following:

1. Press ◯ then [i] to display the **USER OPTIONS** menu (Figure 3-4).
2. Select **Language & Units**. Press [ENTER].

   The cursor is positioned on the **Language** field.
3. Press [1](**Edit**). Then, press ⊖ to display the desired language/country. Press [ENTER] to save your selection.

The language you selected now appears in the **Language** field. The units of measure associated with that language are also displayed.

Creating a Phone List

You can create and store a list of telephone numbers that you use frequently. The list can save you time when you run the dial-up tests described in Chapter 4. The tester can store up to 20 telephone numbers. If a number changes or is no longer needed, you can edit it or delete it from the list. This procedure shows you how to create (add), delete, and edit phone numbers.

To create a phone list:

1. Press ◯ then [i] to display the **USER OPTIONS** menu (Figure 3-4).
2. Select **Phone Numbers**. Press [ENTER].
3. Press **Add Number**.
4. Use the tester's keypad to type the number, then press [ENTER].

   The number is added to the phone list.

To delete a phone number:

1. Select the number that you want to delete.
2. Press **Delete Line**.

   The selected number (and associated information in the “Remarks” column) is removed from the phone list.

To edit a phone number or notes in the **Remarks** field:

1. Press the ⊖ or ⊕ key to select the **Number** or **Remarks** field. Then, press [1](**Edit**).
2. Press the ⊖ or ⊕ key to move the cursor to the desired position within the selected field. Do the following:
   - To type numbers, the asterisk (*), and pound (#) characters, press the desired key.
   - To type alphabetic characters (uppercase only), press ◯, then press the desired key.
   - To put in a space, press ◯, then press 0.
   - To toggle between alphabetic and numeric entry modes, press ◯.
3. Press [ENTER] when done.

Storing the Serial Number and Property Information

If desired, you can store the serial number and owner information for your CopperPro in the tester's memory.

To store property information for the tester, follow these steps:

1. Press ◯ then [ⓘ] to display the **USER OPTIONS** menu (Figure 3-4).
2. Select **Company Info**. Press [ENTER].

   The **Company Info**. screen is displayed. The cursor is positioned on the **Name** field.
3. To supply information on this screen, complete the following:

   Note

   Zipcode *and* ***Phone No****. can consist of up to 16 alphanumeric characters. All other parameters can consist of up to 30 alphanumeric characters.*

   a) Position the cursor on the desired field. Then, press [1](**Edit**).

   b) Use the keypad to enter alphabetic or numeric information.

   To enter alphabetic information, press ◯ to put the tester in Shift mode. Then, press the desired alphabetic key until the character you want is displayed. Press ⊕ to advance the cursor to the next position and type the next character. Continue in this manner until the desired information is displayed.

   To enter numeric information, press the desired number key. Press ⊕ to advance the cursor to the next position and type the next number. Continue in this manner until all of the information you want is displayed.

   c) Press [ENTER] to save.

Configuring the Serial Port

If you want to print, download and upload files, or operate the CopperPro remotely, you need to enable communications between the tester and an external PC or printer.

To configure the tester's serial port for communications with a PC application or serial printer, complete the following:

1. Press ◯ then [1] to display the **USER OPTIONS** menu (Figure 3-4).
2. Select **RS232 Port Setup**. Press [ENTER].
3. The **RS-232 Port Setup** screen is displayed. The cursor is positioned on the **Baud Rate** parameter.

   Note

   The baud rate is pre-configured at 38.4 kb/s for PC uploading and downloading operations. Printer baud rates are internally preset for the Seiko DPU-414 and DPU-411 printer choices.

4. To change the information on this screen, complete the following for each parameter:
   a) Position the cursor on the parameter, then press [1] (**Edit**).
   b) Press ⊖ until you display the desired choice.
   c) Press [ENTER] to save your selection.

Creating a Custom Header for Test Result Files

You can create a custom header for your test result files. The purpose of the header is to identify the operator, company name, test site, and job number. When you view or print a test report, the information that you supply in the following procedure can be selected to appear in the header of the file. This information applies to all of your saved result files until you change it.

To create a header, follow these steps:

1. Press ◯ then [1] to display the **USER OPTIONS** menu (Figure 3-4).

2. Press [4] (**System Setups**). Press [ENTER].

   The **System Setups** screen (Figure 3-5) is displayed. This screen has four parameters. The cursor is positioned on **Operator Name**.

Note

The information you supply for each parameter on this screen can be up to 30 alphanumeric characters long.

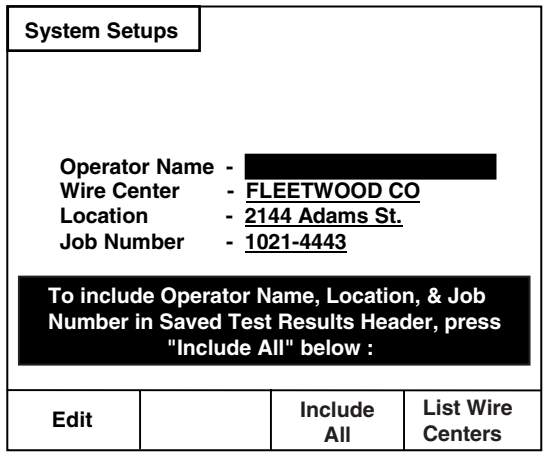

acy09s.eps

Figure 3-5. System Setups Screen

3. To supply an operator name, press [1] (**Edit**). In the **Operator Name** field, type the name. When you finish, press [ENTER].

Note

Consult Table 3-2 for assistance with operating the tester in the Edit mode.

4. Press ⊕ to move the cursor to **Wire Center**. Press [1](**Edit**) and supply the desired information. When you finish, press [ENTER].

Note

Wire Center *defines the primary work location, such as a Central Office Exchange, Cross-Connect Box, or Inside Terminal name.* The tester automatically includes the information that you supply for ***Wire Center*** in the header.

5. Press ⊕ to move the cursor to **Location**. Press [1](**Edit**) and supply the desired information. When you finish, press [ENTER].
6. Press ⊕ to move the cursor to **Job Number**. Press [1](**Edit**) and supply the desired information. When you finish, press [ENTER].
7. To include the information you supplied for the **Operator Name**, **Location**, and **Job Number** in the header for your result files, press [3](**Include All**).

Note

*If you do not press [3](**Include All**), the tester includes only the information you supplied for* ***Wire Center*** *and a timestamp.*

Performing Basic Operations

This section shows you how to perform basic CopperPro operations so that you can quickly get started using the tester. Read this section before you run any tests.

Calibrating the CopperPro

To ensure maximum accuracy of test results, you should calibrate the CopperPro at the start of the day, whenever a significant temperature change occurs, or before you make extremely critical measurements.

The Zero Leads utility is a test lead calibration function that allows the CopperPro to compensate for test lead resistance and capacitance in subsequent Resistance Fault, RFL, and Opens measurements. The constants generated from this test are stored in non-volatile memory and are retained even after you turn off the tester.

To calibrate the CopperPro, complete the following:

1. Press ◯ then [i] to display the **USER OPTIONS** menu (Figure 3-4).
2. Select **Zero Leads**. Press [ENTER].
3. As instructed, connect the Pair 1 and Ground test leads together, then press [TEST].
4. When prompted, disconnect the test leads, then press [TEST].

   If no faults are detected, a "*Zero Leads Completed*" message is displayed. If a problem with measurement values is detected, an error message describing the problem is displayed.

Turning the Backlight On and Off

When you use the tester in low light conditions, you can turn on the backlight for better viewing.

To turn the backlight on and off, press ☼. This key is located halfway down the keypad on the left side of the front panel (see Figure 2-1).

To display the screen in reverse video so that it is easier to view in low-light conditions, press ◯ then ☼. To return to normal video, press ◯ then ☼ again.

Adjusting the Contrast of the LCD

To adjust the contrast of the LCD, complete the following

1. Press ◯.

   Note

   This is the yellow Shift key, which is located in the lower right corner of the keypad (see Figure 2-1). In the lower left corner of the screen, the word *"Shift" appears to indicate that the tester is in Shift mode.*

2. Press ◀ to decrease the contrast or ▶ to increase the contrast.
3. After the level of contrast is acceptable to you, press ◯ again to save the setting.

Adjusting the Volume of the Speaker

The CopperPro has a speaker that emits a distinctive sound when a key is pressed or when certain testing operations are being performed.

To increase or decrease the volume of the sound, do the following:

1. Press ◯. Then, press ⊕ to increase the volume or ⊖ to decrease the volume.

   When you press the arrow key, the speaker emits a tone at the newly adjusted volume, giving you a sample of the level of sound.

2. When the volume is acceptable to you, press ◯ again.

   The new setting is saved in memory and remains in effect even after you turn off the tester.

Displaying System Information

To find out what version of software you have or what options are installed on the tester, complete the following:

1. Press ◯ then [ℹ] to display the **USER OPTIONS** menu (Figure 3-4).

2. Select **System Version**. Press [ENTER].

   The **System Version** screen displays the following information about the tester:

   - Software version loaded
   - Top assembly hardware revision
   - Installed options (if any).

Operating the Tester as a Dial Set

To operate the CopperPro as a dial set, do the following:

1. Turn on the CopperPro.
2. Connect the **T** (Tip) and **R** (Ring) test leads to a working POTS line. If the line is a ground-start line (as opposed to loop-start), connect the **G** (Ground) test lead to the cable sheath or C.O. ground.
3. Press (DIAL).

   The **Dialing Mode Selection** screen is displayed.
4. Do one of the following:
   - To automatically dial the number, press [1](**Auto-Dial**). Select the number from the list, then press [TEST START STOP].
   - To manually dial the number, press [2](**Manual Dial**). Then, dial the number from the keypad.
5. When you finish dialing, turn the tester over.

   You can now use the speaker and microphone as a standard handset.

Note

If the volume of the speaker needs to be adjusted, see "Adjusting the Volume of the Speaker", earlier in this chapter.

Running a Self-Test

The self-test is a rigorous test of the internal CopperPro hardware. It is a good idea to periodically run a self-test to verify that your tester is operating properly. If the self-test fails, a diagnostic message is displayed.

The CopperPro has the following self-tests:

- POTS self-test
- WB self-test
- TDR self-test

To run a self-test, complete the following:

1. Press ◯ then [i] to display the **USER OPTIONS** menu (Figure 3-4).
2. Select **Self-Test**. Press [ENTER].
3. Press the softkey for the self-test that you want to run. Then, press [TEST].

Printing Displayed Results and Setup Information

You can print any setup information or test result screen that is currently displayed on the tester's LCD. To do this, follow these steps:

1. Connect one end of the optional serial printer cable to the CopperPro's RS-232 port. Connect the other end to the serial printer.
2. Select the printer type in User Options, "RS232 Port Setup".
3. Display the setup or result screen that you want to print.
4. Press ◯ then [SAVED RESULTS] ("Print Screen" alternate function).
5. Press [1] (**Printer**) to print the screen to the connected printer.

   The contents of the currently displayed screen are sent to the printer.

   If you want to print test results that are saved in the tester's memory, see "Saved Test Results" in Chapter 7.

Transferring a Screen Image to a PC

To transfer any screen image to a PC in the in the ".BMP" file format (for viewing or printing to a non-supported printer):

1. Connect the supplied serial cable to the CopperPro's serial port and a PC COM port.
2. Display the desired CopperPro screen for transfer.
3. On the PC, open a standard ASCII data communications program (HyperTerminal, TeraTerm, etc.). Set up the program as follows:
   - Baud Rate = 38,400 bps.
   - 8 Data bits, 1 Stop bit, No Parity.
   - Set data transfer mode to the XMODEM Receive File format, with CRC enabled.
   - Name the file with a ".BMP" file extension.
4. On the CopperPro, press ◯, then [SAVED RESULTS] ("Print Screen" function). A message is displayed prompting you to start the file transfer.
5. Start the PC communications program XMODEM file transfer. The ".BMP" screen file begins transferring.
6. When complete, open the transferred file using a standard graphics program (for example, Microsoft Paint or PowerPoint).

   The graphics file can then be viewed or printed on any attached Windows-compatible printer.

Chapter 4
POTS Testing and Fault Location

Introduction

This chapter shows you how to use the CopperPro tester to identify and locate common physical problems on OSP copper pairs, and how to qualify lines for POTS service. The chapter begins by showing you how to set up and run a POTS Auto-Test. The POTS Auto-Test is comprised of a sequence of individual parametric tests that run automatically. Results from this test can give you a quick overall assessment of the performance characteristics of either a spare or working POTS pair.

The chapter then describes the individual tests in the POTS toolbox. This toolbox contains a group of specialized tests that provide detailed information to help you diagnose specific problems in a cable. In the POTS toolbox, you will find two groups of tests: copper media (DC) tests and transmission (AC) tests. The copper media tests are designed to identify and locate physical voltage, resistance, and capacitance faults, and test for continuity in a cable. The transmission tests provide accurate measurements of signal loss, metallic noise, power influence, and longitudinal balance to help you uncover root problems affecting signal transmission.

POTS Auto-Test

The POTS Auto-Test is a sequence of user-selectable *single-ended* parametric and transmission tests. The test can be run on *either* spare or working POTS pairs, with the appropriate selected tests automatically performed. It is an ideal tool to qualify POTS pairs, as well as providing an overview for fault analysis.

Table 4-1 lists the individual tests that comprise the POTS Auto-Test. All but the first two tests are user selectable, which gives you the flexibility to customize an Auto-Test that fits your particular testing situation.

Setting Up a POTS Auto-Test

To set up a POTS Auto-Test, complete the following:

1. From the **Main** menu, select the **POTS Auto-Test**.
2. Press [4] (**Setups**).

   The **Setups–POTS Auto-Test** screen 1 (Figure 4-1) is displayed:

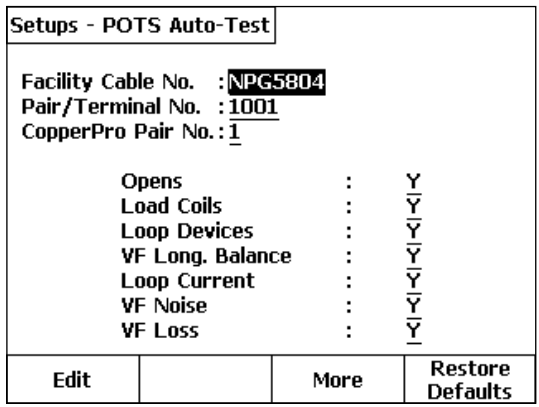

acy11s.eps

Figure 4-1. POTS Auto-Test Setup Screen 1

Two groups of setup parameters are listed on this screen. The first group consists of the generic setup parameters, and the second group lists the tests that you can run under the POTS Auto-Test (refer to Table 4-1).

3. If desired, supply a value for each generic setup parameter.

Note

Table 3-1 describes the generic setup parameters. If you need instructions for changing their values, see "Editing the Setup for a Test" in Chapter 3.

4. Select the tests that you want to include in the Auto-Test. For each test, do the following:

   a) Press ⊕ or ⊕ to select the test. Then, press [1] (**Edit**).

   b) Press ⊕ or ⊕ to select **Y** if you want to include the test or **N** if you do not want to include the test.

   c) Press [ENTER] to save your selection.

Note

*To restore the factory default values of the setup parameters, press [4] (**Restore Defaults**).*

To change the setup for any of the individual tests, see "Editing the Setup for a Test" in Chapter 3. Individual test default settings are for POTS service qualification.

There is a second screen of setups for the POTS Auto-Test, accessible by pressing [3] (**More**). Table 4-1 lists the tests you can include in the POTS Auto-Test, plus other setup parameters on the second setups screen.

Table 4-1. User-Selectable Tests for the POTS Auto-Test

Test	Description	Settings (default in bold)
Voltage	Measures AC and DC voltages on all legs of spare or working pairs.	No choice, always run.
Shorts & Grounds	Measures resistance between all legs of spare pairs.	No choice, always run. (**N/A** on working pairs)
Opens	Measures capacitance on spare pairs, converting to distance based on the **Cable Type** selected.	Select **Y** to enable the test Select N to disable the test. (**N/A** on working pairs)
Load Coils	Detects the number of coils and approximate distance to the first, on spare or working POTS pairs, plus a frequency response graph.	Select **Y** to enable the test Select N to disable the test.
Loop Devices	Detects the presence of loop treatment devices, fault-sectionalizing devices, and Mechanical Bell Ringers on spare or working POTS pairs.	Select **Y** to enable the test Select N to disable the test.
VF Long. Balance	Measures resistive and capacitive balance of the pair to Ground, on spare or working POTS pairs.	Select **Y** to enable the test Select N to disable the test.
Loop Current	Measures Loop Current, Ring-Ground Current, and cable sheath Ground resistance on working POTS pairs.	Select **Y** to enable the test Select N to disable the test. (**N/A** on spare pairs)

Table 4-1. User-Selectable Tests for the POTS Auto-Test (continued)

Test	Description	Settings (default in bold)
VF Noise	Measures Metallic Noise and Power Influence (P.I.) on spare or working pairs. Measures Dial-up Noise if QT number entered in Setup screen 2.	Select **Y** to enable the test Select N to disable the test.
VF Loss	Measures Dial-up VF Loss on working POTS pairs, if Milliwatt number entered in Setup screen 2.	Select **Y** to enable the test Select N to disable the test. (**N/A** on spare pairs)
VF Noise Quiet Term. #	Quiet Termination phone number. (Setup screen 2)	Enter number to enable test on working POTS pairs.
VF Loss Milliwatt #	Milliwatt or N-Tone sweep number. (Setup screen 2)	Enter number to enable test on working POTS pairs.
VF Noise Test Delay	Post-dialing delay prior to running VF Noise test. (Setup screen 2)	Enter number of seconds to delay after dialing, prior to running test.
VF Loss Test Delay	Post-dialing delay prior to running VF Loss test. (Setup screen 2)	Enter number of seconds to delay after dialing, prior to running test.
Cable Type	Required by Opens test	Select from Cable Type list
Cable Gauge	Required by Load test	Select from Cable Ga. list
Cable Temperature	Required by Load test	Enter Cable Temperature
Measurement Mode	Required by S&G Test	Select **Normal** for cables with normal levels of P.I.; Select High AC Rejection for cables with high P.I, or when the sheath is conducting high AC current such as that caused by unbalanced 3-phase power loading in the vicinity.

Running the POTS Auto-Test

You can start a POTS Auto-Test in one of two ways:

- From the **Main** menu (Figure 3-2), select **POTS Auto-Test**. Then, press [TEST].

  OR

- From the **Setups - POTS Auto-Test** screen, press [TEST].

The POTS Auto-Test begins, running each of the tests that you specified in the setup.

To stop a POTS Auto-Test at any time, press [TEST].

POTS Auto-Test Results

While Auto-Test is running, the tester displays the test it is currently performing. When Auto-Test is completed, a Test Summary screen is displayed, showing each test and whether it passed or failed, as shown in Figure 4-2:

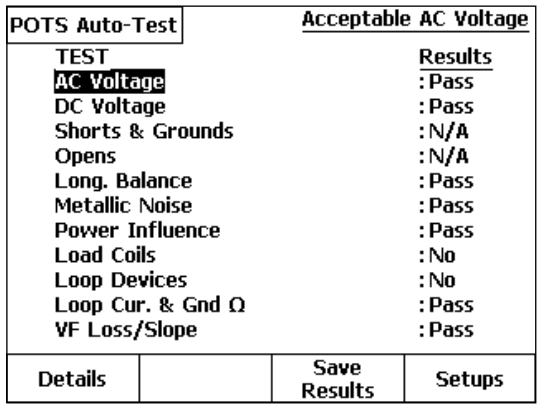

acy101s.eps

Figure 4-2. POTS Auto-Test Summary Results

Note

*"**N/A**" in the **Results** column indicates that the test was selected but not run because of excessive voltage or resistance on the pair.*
*"**N/S**" indicates the test was not selected in Auto-Test Setups.*

If one or more tests fail, the cursor is positioned on the first failed test. The failed test is highlighted in steady, reverse-video format, with a flashing "FAIL" indicator. If all tests pass, the cursor is positioned on the first test in the list, and that test is highlighted.

To view the summary result for a test, press ⊕ or ⊕ to scroll through the list of tests. As the cursor is positioned on the name of a test, it is highlighted and its summary result is displayed in the upper right corner.

To view the details behind a summary result, press ⊕ or ⊕ to position the cursor on the name of the test, then press [1](**Details**).

To page directly to the next test "Details" screen, press ⊕.

To view the setup for a test, press ⊕ or ⊕ to position the cursor on the name of the test, then press [4](**Setups).**

Saving POTS Auto-Test Results

Auto-Test results, unlike individual test results, are *not* automatically saved. To save the POTS Auto-Test results, do the following:

1. From the Test Summary screen, press [3] (**Save Results**).
2. Enter the following Test Identification information:
   - **Job #** (enter up to 16 alphanumeric characters)
   - **Cable** (enter up to 16 alphanumeric characters)
   - **Pair** (enter up to 16 alphanumeric characters)
3. Press [2](**Save Results**).

The POTS Auto-Test results are now saved as Text Results in non-volatile memory, with failing results flashing. In a printout, failing results are preceded by an "*" for easy identification.

The POTS Toolbox

The POTS Toolbox includes the same tests that are available in the Auto-Test (see Table 4-1) as well as other fault location tests. This section introduces the POTS toolbox tests, shows you how to run them, and describes their results.

Running a Test in the POTS Toolbox

- From the **Main** menu, press [1] (**POTS**) to display the POTS toolbox (Figure 4-3). Press an arrow key to select the desired test, then press [TEST].

  OR

- Display the setup menu for the desired test (see "Displaying a Setup Menu" in Chapter 3), then press [TEST].

To stop a running test, press [TEST].

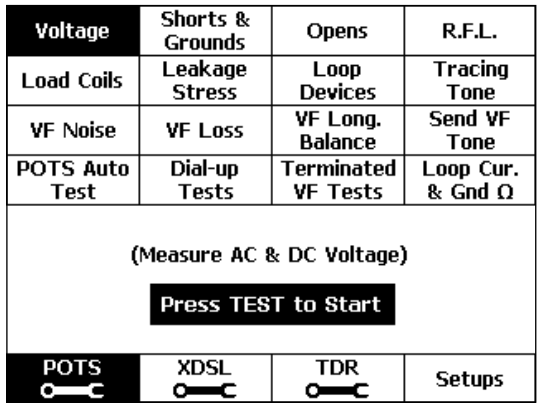

acy14s.eps

Figure 4-3. POTS Toolbox

Voltage Test

The Voltage test gives you a "snapshot" measurement of AC and DC voltages on each leg of a pair. The test can identify hazardous voltage, an idle or busy POTS line, a Special Service circuit "footprint", or a cross-to-battery fault.

Setting Up a Voltage Test

To set up a Voltage test, select the test on the POTS Toolbox and press 4 (**Setups**). Refer to Table 4-2 for Voltage test setup parameters.

Table 4-2. Voltage Test Setup Parameters

Parameter	Settings (default in bold)
ACV Hazard. Volt Threshold	≥**50** VAC (Range = 40 to 120)
ACV Pass Thresholds - TR:	≤**3** VAC (Range = 1 to 30)
TG & RG:	≤**25** VAC (Range = 1 to 30)
DCV Hazard. Voltage Threshold	≥**190** VDC (Range = 70 to 200)
DCV Pass Threshold	≤**3** VDC (Range = 1 to 20)
DCV Test Impedance	**100 KΩ** (Std. Telephony impedance) 1 MΩ (Compatible with 965DSP™) 10 MΩ (Compatible with DVMs)
DCV Idle POTS Voltage Range	High side = **-60** to **-44** VDC Low side **= 4** to **-4** VDC (Range = 0 to ± 99 VDC) (Absolute value of Low < High)
DCV Busy POTS Voltage Range	High side = **-44** to **-26** VDC Low side = **-4** to **-25** VDC (Range = 0 to ± 99 VDC)

Voltage Test Results

To run a Voltage test, select the test on the POTS Toolbox and press [TEST]. When completed, voltage results for all legs are displayed as shown in Figure 4-4:

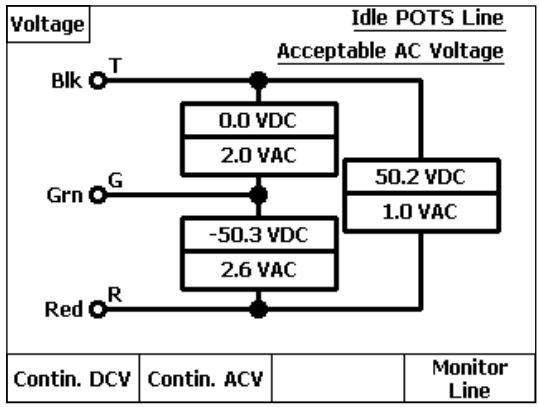

acy15s.eps

Figure 4-4. Voltage Test Results: Idle POTS Line

An Idle POTS line was detected in this test, as is shown in the status area in the upper right corner. Also, voltage readings are reported that are outside the acceptable limits for a spare pair (as defined in Setups). These readings are shown on the diagram in flashing, reverse video format for emphasis.

From the result screen, you can do the following:

- Press [1] (**Contin. DCV**) to obtain continuously updated DCV values for any selected leg (see “Running a Continuous Voltage Test” for details).
- Press [2] (**Contin. ACV**) to obtain continuously updated ACV values.
- Press [4] (**Monitor Line**) to non-intrusively monitor the pair using the tester’s built-in speaker (see “Monitor Line Test” later in this chapter).

Running a Continuous Voltage Test

To continuously monitor DC voltage on a pair, do the following:

1. Press [1](**Contin. DCV**).

   The **Continuous DCV** screen (Figure 4-5) is displayed.

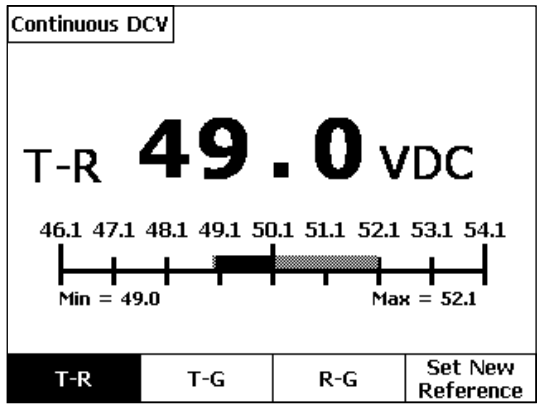

acy16s.eps

Figure 4-5. Continuous Voltage Test Result Screen

   Figure 4-5 shows a continuous DCV value for the T-R leg. The bar graph plots real-time voltage variations against the reference (center) value of the initial reading. Peak voltage excursions are recorded as half-tone shaded portions of the bar, with excursions beyond the scale marked as "Min" and "Max" values. The current reading is shown in large, solid black numbers. Each scale mark on the bar graph corresponds to one unit of measure (in this case, 1 volt) of the parameter.

2. To continuously test another leg, press [2](**TG**) or [3](**RG**).
3. To re-center a reading that has drifted, press [4](**Set New Reference**).
4. To stop a continuous test, press [TEST] or [BACK].

Shorts & Grounds Test

The Shorts & Grounds test provides a “snapshot” measurement of the resistances between each leg (TR, TG, and RG) of a pair.

Setting Up a Shorts & Grounds Test

To set up a Shorts & Grounds test, select the test on the POTS Toolbox and press 4 (**Setups**). Refer to Table 4-3 for test setup parameters.

Table 4-3. Shorts & Grounds Test Setup Parameters

Parameter	Settings (default in bold)
Resist. Fault Pass Threshold	≥**150** KΩ (Range = 2 to 9999)
Cable Gauge	19, 22, **24**, 26, or 28 AWG
Cable Temperature	**68°** F (Range = –99 to 199)
Measurement Mode	**Normal** or High AC Rejection (See POTS Auto-Test Setups for details)

Shorts & Grounds Test Results

To run a Shorts & Grounds test, select it on the POTS Toolbox and press TEST.

In Figure 4-6, the Shorts & Grounds test detected a short (**Tip-Ring Short**) on the pair, due to a fault resistance reading (**500 Ω**) that is outside the acceptable limits (as defined in the setup for the test). This reading is shown in flashing, reverse video format.

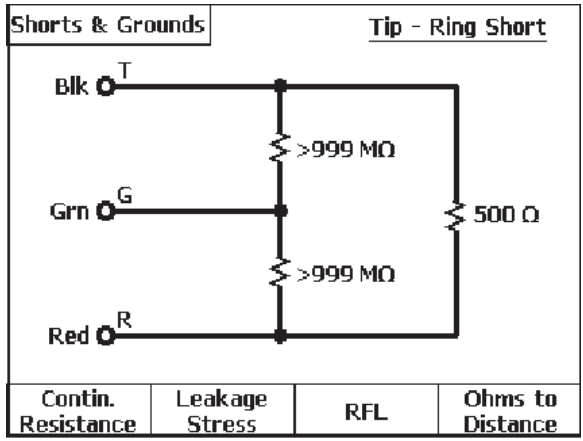

elf17s.eps

Figure 4-6. Shorts & Grounds Test Results: Short

To run additional tests directly from this screen, do the following:

- Press 1 (**Contin. Resistance**) to obtain a continuous resistance reading.
- Press 2 (**Leakage Stress**) to run a high voltage test to break down and expose high resistance oxidized copper faults. (See “Leakage Stress Test”)
- Press 3 (**RFL**) to run a Resistance Fault Location test to locate the fault.
- Press 4 (**Ohms to Distance**) to convert the fault resistances to distances. (See “Converting Fault Resistance Values to Distance Values”, which follows, for instructions).

Converting Fault Resistance Values to Distance Values

Often the fault resistances displayed are “hard” shorts or grounds, meaning that the fault is at zero Ohms, and the resistance shown is only the conductor resistance itself to that fault. In these situations, the Tester can convert the resistances to distances— if you supply the cable gauge and temperature.

To convert the fault resistance values to distances, complete the following:

1. On the Shorts & Grounds result screen, press [4] (**Ohms-to-Distance**).
2. If the cable gauge or temperature is different from that specified in the setup for the test, do the following:
   - If the pair consists of only one gauge, press [4] (**Setups)**, and select the proper gauge and temperature. Then press [BACK].
   - If the pair consists of more than one gauge, press [3] (**Multiple Gauge**). Then enter each section length and gauge (see “Entering Multiple Wire Gauge Information” for details). When done, press [BACK] to return to the resistance display.
3. Press [1] (**Convert to Distance**) to display the distances.

Opens Test

The Opens test performs a true three-terminal test on a pair. To run the test, you need to choose the appropriate Cable Type (see Table 4-4).

Note

You do not need to provide the "D" Factor (or TG /TR Capacitance Ratio) or have to ground a percentage of spares in the cable to get an accurate distance reading, as you do with conventional 2-terminal meters. The Tester actually measures the Capacitance Ratio of the pair during the Opens Test.

The Opens Test performs a measurement of the capacitive length of the pair, as well as the capacitive balance between the Tip and Ring conductors.

Setting Up an Opens Test

To set up an Opens test, select the test on the POTS Toolbox and press 4 (**Setups**). Refer to Table 4-4 for setup parameters for the Opens test.

Table 4-4. Opens Test Setup Parameters

Parameter	Setting (default in bold)
Cable Type	**Jelly Filled**, Air Core, JKT, 5 Pr. Buried Drop, 2 Pr. Buried Drop, 1 Pr. Aerial Drop, 1 Pr. Universal Drop, or Custom.
Cap. Balance Pass Threshold	≥**95 %** (Range = 0 to 99)

Opens Test Results

To run an Opens test, select the test on the POTS Toolbox and press [TEST].

Figure 4-7 shows an Opens test that was conducted on a good, balanced pair:

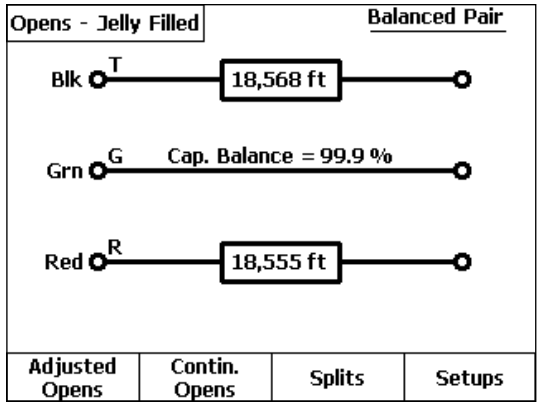

acy18s.eps

Figure 4-7. Opens Test Result: Good Pair

Depending on the results you obtain, you may want to run additional tests on the pair. From the Opens test results screen, you can do the following:

- Press [1] (**Adjusted Opens**) to calibrate the pair to a known length or mutual capacitance value (see "Adjusted Opens Test" for details).
- Press [2] (**Contin. Opens**) to run a continuous 2-terminal test on a selected leg. Press ⊕ or ⊕ to convert to capacitance readings.
- Press [3] (**Splits**) if the pair is known to be a split pair (see "Splits Test" later in this chapter).

CPE Correction

If a bad Ground connection, open sheath, or far-end CPE termination is present, the tester will measure a 3T Capacitance Ratio that is much lower than normal. As a result, the 990 will display **Open Ground or CPE** on the results screen and will also provide a **CPE Correction** softkey [3]. If a bad ground connection or open sheath is not suspected, press the CPE Correction softkey. The unit will then display corrected distances, subtracting CPE effects.

Adjusted Opens Test

A cable manufacturer's data can vary by as much as 7% among cables. Therefore, for greater accuracy, it is strongly recommended that you first perform an Opens test on a *known good* pair in the cable. This data can then be saved as a Custom Cable Type for further use on faulted pairs in the same cable. Alternatively, if the length of a good pair is known by another more accurate means, you can enter that length and store the data as a Custom Cable Type. This is called an *Adjusted Opens* measurement.

Figure 4-8 shows the results from a balanced pair being used to create a Custom Cable Type for future usage on other pairs in the same cable

To run an Adjusted Opens test, do the following:

1. Run an Opens Test on a good, balanced pair in the cable.
2. Press [1](**Adjusted Opens**).

   A screen like the one in Figure 4-8 is displayed:

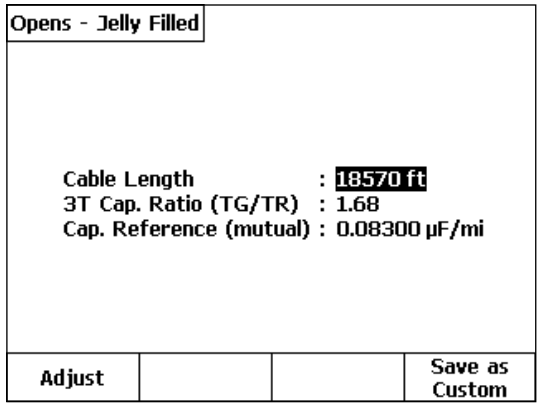

acy19s.eps

Figure 4-8. Adjusted Opens Test Screen

3. If the **Cable Length** value is *not* correct:
   - Press 1 (**Adjust**), then enter a known good value for **Cable Length** (five digits maximum, no commas), and / or a **Cap. Reference** value if known to be non-standard.
   - When finished, press 4 (**Save as Custom**) to create a Custom Cable Type based on the entered data, using the same **3T Cap. Ratio** value as measured on the good pair.
4. If the **Cable Length** value *is* correct:
   - Press 4 (**Save as Custom**) to create a Custom Cable Type with the same **3T Cap. Ratio** value as measured on the good pair.

Splits Test

The Splits test should be run if an Opens Test result shows a “Possible Split or Water” condition. However, a split condition may exist that is not detected by the Opens Test, due to the length of the split being fairly short. In this case, when the pair is known to be split but shows to be good and balanced, you should run the Splits Test.

Note

The Splits test provides the approximate distance to a split. To precisely locate a split, it is recommended that you run a TDR test (see Chapter 6 “TDR Testing and Fault Location” for details).

Figure 4-9 shows an Opens test results screen which reports a possible split.

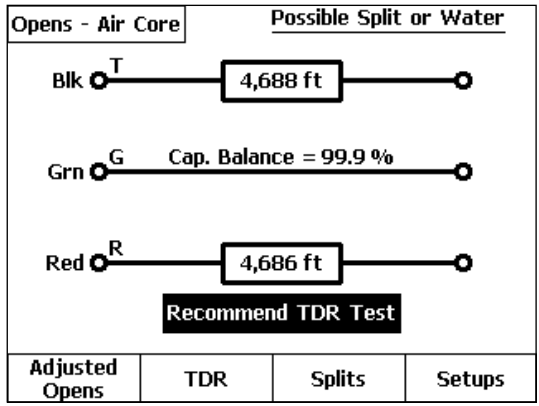

acy20s.eps

Figure 4-9. Opens Test Result Screen: Possible Split or Water

Notes

The "Possible Split or Water" result is generated whenever the 3T Capacitance Ratio (TG to TR) of a balanced pair is greater than the average ratio for the selected Cable Type. This may be due to either a split pair condition, enough water in the cable to alter its 3T Cap. Ratio, or a good pair having a non-standard 3T Cap. Ratio.

If the pair is a known good pair with a non-standard 3T Cap Ratio, you can create a Custom Cable Type with those characteristics by pressing 1 (**Adjusted Opens,** *then* 4 (**Save as Custom**)*. Subsequent tests on like pairs will result in the omission of the "Possible Split or Water" message.*

To determine the approximate location of the split, proceed as follows:

1. On the Opens test result screen, press 3 (**Splits**).

   A connection diagram is displayed, as shown in Figure 4-10:

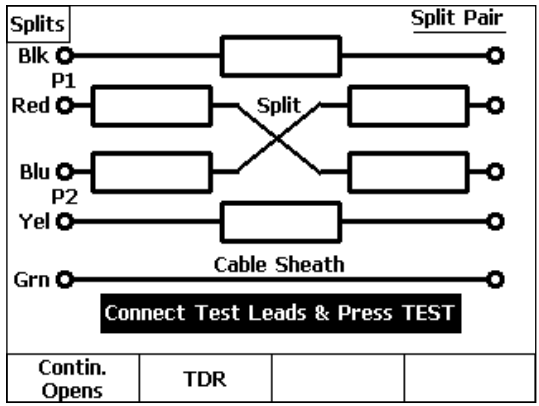

acy21s.eps

Figure 4-10. Splits Test: Connection Diagram

2. Verify that the pair is actually split with another pair, and then locate the second split pair with a tracing tone probe or other standard method.
3. As prompted, connect the tester's Pair 1 and 2 test leads to the two split pairs *exactly* as shown in the connection diagram (Figure 4-10).
4. Press [TEST].

Note

The two split pairs must be the same lengths (within ±5 %) to obtain a meaningful measurement. If not, the tester detects the imbalance and displays an error message.

The tester makes the required measurements, as shown in Figure 4-11:

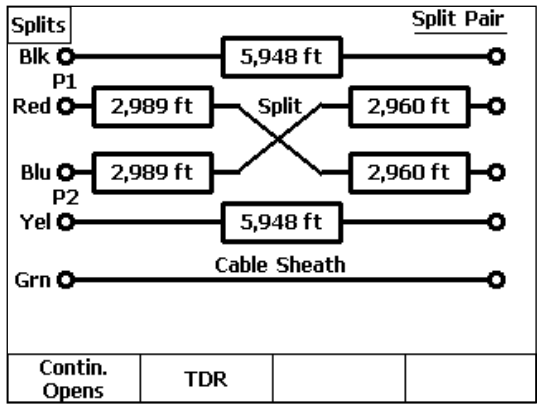

acy96s.eps

Figure 4-11. Splits Test Result Screen

5. Press [1](**Contin. Opens**) to view continuous two-terminal information, which includes the selected leg length or capacitance.
6. Press [2](**TDR**) to obtain a more accurate value of the distance to the split.

Resistance Fault Location (RFL) Test

The RFL test provides a highly accurate method of locating resistance faults (shorts, grounds, or crosses), including those that are *too large* for the TDR test to locate. It does this by using cable gauge and temperature values in a "nulling bridge" process. In this process, half of a resistance bridge is formed within the tester, and the faulted pair (strapped at the far end, as prompted) forms the other half of the bridge. The internal bridge ratio is then changed until it precisely mirrors the ratio of the faulted leg to the good leg, and is then used to calculate resistance values to the fault and strap.

Setting Up an RFL Test

To set up an RFL test, select the test on the POTS Toolbox and press 4 (**Setups**). Refer to Table 4-5 for RFL test setup parameters.

Table 4-5. RFL Test Setup Parameters

Parameter	Settings (default in bold)
Cable Gauge	19, 22, **24**, 26, or 28 AWG
Cable Temperature	**68°** F (Range = –99 to 199)
Measurement Mode	**Normal** or High AC Rejection (See POTS Auto-Test Setups for details)
RFL Fault Pass Threshold	**30** M Ω (Range = 1 MΩ to 30 M Ω)
Multiple Gauge Entry Limits	Section Length (Range = **0** to 9999 ft.) Gauge / mm (Same as Cable Gauge) Load (**Y** or **N)**

Running an RFL Test

To run an RFL test, do one of the following:

- Select **RFL** in the POTS Toolbox (Figure 4-3), then press TEST.

  OR

- From the **Setups - R.F.L.** menu, press TEST.

The tester locates the leg positions and values of all fault resistances, and then displays a screen that prompts you to connect a far-end strap (dotted line).

For a single-sided ground fault, the display will look like Figure 4-12:

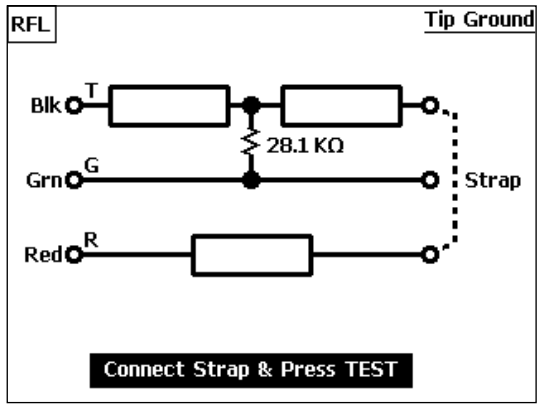

acy22s.eps

Figure 4-12. RFL Test Results: Fault Value and Position

If your screen is similar to Figure 4-12, go to “Single-Sided Fault Location Test Results” for instructions on how to obtain the distance to the fault.

If the fault is a short or if both conductors are faulted, or a shorting strap *has already been placed at the far end* for a single-sided fault, the tester displays a screen like Figure 4-13:

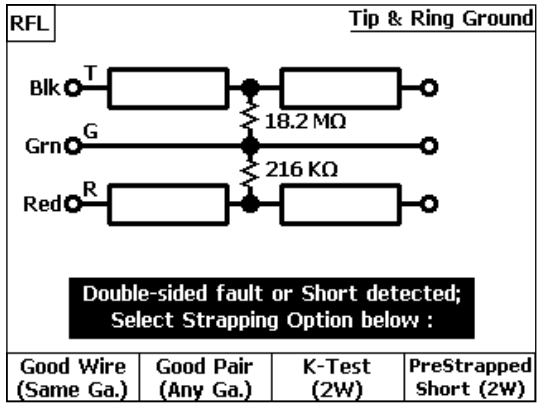

acy25s.eps

Figure 4-13. RFL Test Results: Double-sided Fault or Short

If your screen is similar to the one in Figure 4-13 and you *have not already connected* a far-end strap, go to "Short or Double-Sided Fault Location Test Results" for instructions on how to strap the pair and complete the test.

If your screen is similar to this and you *have already placed* a far-end T-R shorting strap for location of a single-sided fault, press 4 (**Pre Strapped Short (2w)** and continue below with step 2.

Note

The far end of a double-sided fault or short may be pre-strapped with a good wire or pair prior to running the RFL test, with no change in procedures.

Single-Sided Fault Location Test Results

To locate a single-sided fault, do the following:

1. Connect the strap as shown in Figure 4-12, then press [TEST].
2. If the tester was turned off during the strap connection process:
   - Turn it on, and select RFL again from the POTS Toolbox.
   - Select [1] (**Continue Prev. Test**), then press [TEST].

   If the strap is not detected, a "*Strap Connection Error*" message is displayed.

   If the strap is properly connected, the tester performs a "fault null" operation and displays a screen similar to the one in Figure 4-14.

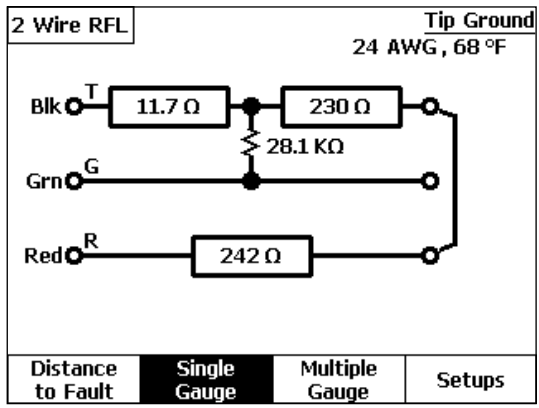

acy23s.eps

Figure 4-14. Two-Wire RFL Test Results: Tip Ground

Figure 4-14 shows the conductor resistance values to the fault, and from the fault to the strap (shown in the diagram as a solid line).

3. If you supplied the correct gauge and temperature information in RFL Setups prior to running the test, press 1 (**Distance to Fault**).

4. If the correct gauge and temperature were not entered into Setups prior to the test, you can enter them now:

   a) Press either 4 (**Setups**) to enter single-gauge and temperature information or press 3 (**Multiple Gauge**) to enter multi-gauge section information.

   b) When finished, press BACK, then 1 (**Distance to Fault**).

   The relevant distances are displayed, as shown in Figure 4-15.

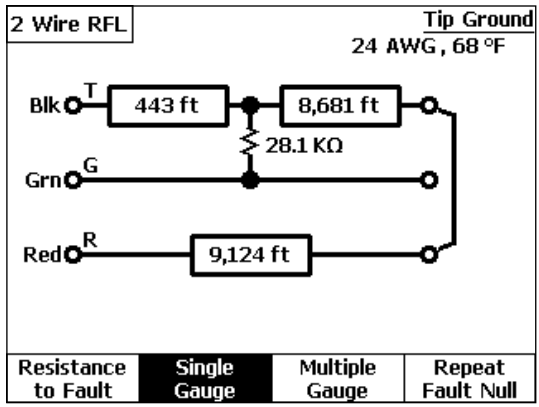

acy24s.eps

Figure 4-15. Two-Wire RFL Test Results: Distance to Fault

5. If you want to obtain a second reading with the test leads connected to the same pair, press 4 (**Repeat Fault Null**).

   The tester repeats the nulling process without again measuring fault resistances.

Entering Multiple Wire Gauge Information

For pair counts composed of multiple wire gauge sections, or sections containing load coils, use this procedure to store multiple gauge information.

The tester lets you store up to 20 “sections” of data. A section is defined as a length of cable having a gauge that is different from the preceding length, or a length of cable containing a load coil at the end.

To enter multiple wire gauge information, do the following:

1. On either the **Setups - RFL** or an RFL Test Results screen, press 3 (**Multiple Gauge**).

   An entry screen is displayed. The **Length** field is highlighted.

2. Press 1 (**Edit**).

   A blinking cursor appears in the first character position of the **Length** field as shown in Figure 4-16:

2 Wire RFL

Section	Length	Gauge	Load Coil	Strap Dist.
1.	0	24 AWG	N	N
2.	0	24 AWG	N	
3.	0	24 AWG	N	
4.	0	24 AWG	N	
5.	0	24 AWG	N	
6.	0	24 AWG	N	
7.	0	24 AWG	N	
8.	0	24 AWG	N	
9.	0	24 AWG	N	
10.	0	24 AWG	N	

Edit	Insert Section	Delete Section	MORE ⬍

acy32s.eps

Figure 4-16. RFL Multiple Wire Gauge Entry Screen

3. Enter the length of the first section (five digits maximum, with no commas), using the same units of measure (feet or meters) selected for the Language configuration, then press [ENTER].
4. Press ⊕ to move the cursor to the Section 1 **Gauge** field.
5. Press [1] (**Edit**), press ⊕ or ⊕ for the desired gauge, then press [ENTER].
6. Press ⊕ to move the cursor to the **Load Coil** field.
7. Press [1] (**Edit**), and press ⊕ or ⊕ to select **Y** if a load coil terminates the section or **N** if it does not. Then, press [ENTER].
8. Press ⊕ to move the cursor to the **Strap Dist.** field.
9. If the Section 1 length entered is the actual *known* distance to the strap, press ⊕ or ⊕ to select **Y**. Otherwise select **N,** and press [ENTER].
10. Press ⊕ to move the cursor to the Section 2 **Length** field.
11. Repeat Steps 2-7 until you enter information for all of the sections. When you finish, press [BACK] to return to the **RFL** results screen.

Note

*It is important to make sure that the last section that you enter contains the strap position. If an "**Insufficient Length Entered**" message is displayed when you press the [BACK] key to exit the Multi-gauge Entry screen, it is because the sum of the entered lengths is shorter than the Distance-to-Strap length measured by the tester. In this situation, first verify that the entered **Length** and **Gauge** information is correct. If so, increase the length you entered for the last section. This change does not affect the accuracy of the results but allows agreement between the entries and measurements.*

Deleting or Inserting a Wire Gauge Entry

To delete the information in a complete Section number line, select the desired section using ⊕ or ⊕, then press 3 (**Delete Section**).

To insert a section, position the cursor to the section above which you want to add a line, and press 2 (**Insert Section**).

RFL Test "Distance to Strap" Entry

If the distance to the strap was known and entered into Section 1 of the above Multiple Gauge entry screen (along with **Y** in the **Strap Dist.** field), *all other section data will be ignored*. The RFL fault distances will then be based on a wire resistivity that is calculated from the entered strap distance.

Note

If the cable contains one or more gauge changes between the tester and the far-end strap, the average resistivity calculated from the entered strap distance could result in inaccurate distance-to-fault or fault-to-strap readings, depending on the relative lengths of the different gauges.

Short or Double-Sided Fault Location (3 Wire) Test Results

To view test results for a short or double-sided fault, select the desired strapping option to complete the bridge (as prompted in Figure 4-13).

Note

If the fault is a short or if both conductors are faulted, you must use either a good conductor or pair to complete one leg of the bridge. It is best to use a separate good pair for the leg because it can be ***any length or gauge****. If only one good conductor is available, it can work as well, but it must be the* ***same length and gauge*** *as the faulted pair.*

Do *one* of the following:

- If only one good conductor is available, press [1] (**Good Wire-Same Ga.**), and a connection diagram like that shown in Figure 4-17 is displayed:

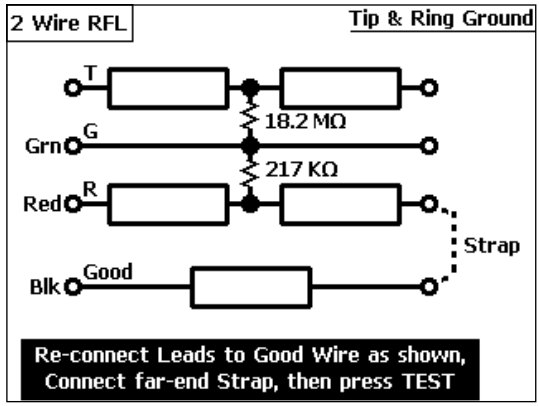

acy29s.eps

Figure 4-17. Two-Wire RFL Test Results: Good Wire Strap

a) As prompted, reconnect the leads to the good wire and connect the far-end strap. Then, press [TEST].

When the test finishes, resistance values are displayed.

b) Press [1] (**Distance to Fault**), and distances to the fault and strap are then displayed, as shown in Figure 4-18:

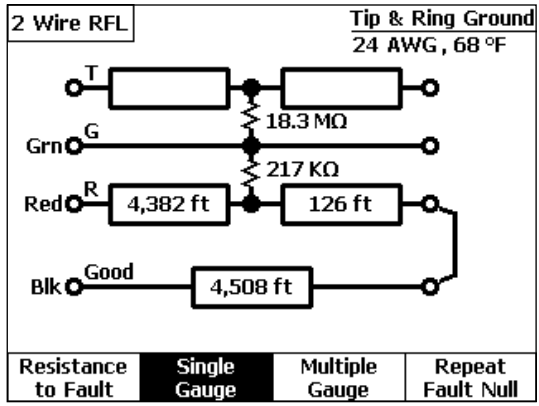

acy30s.eps

Figure 4-18. Two-Wire RFL Test Results: Distances

OR

- If a good pair is available, press [2] (**Good Pair-Any Ga.**), and a connection diagram like the one shown in Figure 4-19 is displayed.

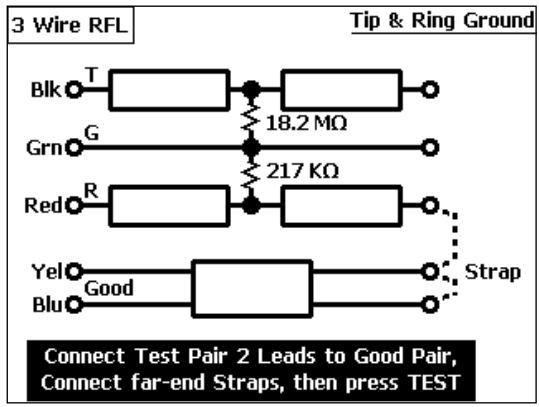

acy26s.eps

Figure 4-19. Three-Wire RFL Test: Good Pair Strap

This diagram shows the T1 and R1 test leads connected to the good pair and a far-end strap (in dotted lines).

To complete the test, do the following:

a) Connect the Pair 2 test leads (T1 and R1) to the good strapping pair and connect the far-end straps, then press [TEST].

The tester runs the test using the separate good pair as the strap. When completed, resistances to the fault and strap are displayed.

Note

The 3W RFL test is slightly longer because the tester has to run the nulling bridge process on both the strap and the faulted pair.

b) Press [1](**Distance to Fault**), and distances to the fault and strap are displayed as in the example of Figure 4-20.

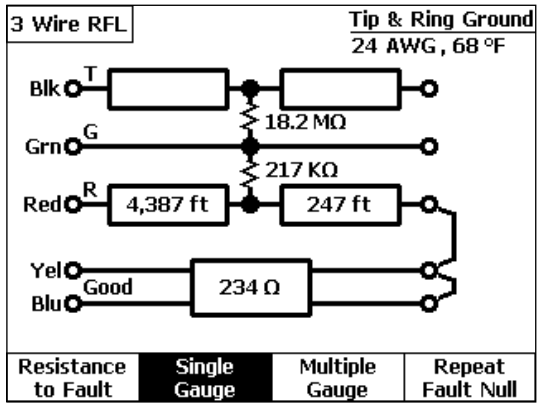

acy27s.eps

Figure 4-20. Three-Wire RFL Test Results: Distances

RFL Test: K-Test Option

The "K-Test" is a variation of RFL that can be used whenever a double-sided fault is present, *and there are no good conductors in the cable* to use for either the "Good Wire" or "Good Pair" strapping function.

Oftentimes, one fault will be ten or more times greater than the other in a double-sided fault scenario. In cases like this, the Fault Resistance Pass Threshold (in RFL Setups) can simply be lowered to eliminate the larger value fault, and you can run the simpler single-sided RFL test and still maintain a fair degree of accuracy. In other cases, use the K-Test option.

K-Test Pair Requirements

- Both resistance faults must be to the *same fault potential*, and occur at the *same physical place* on the cable.
- The larger fault resistance must be *greater than twice* the smaller value.
- The larger fault resistance must be at least *one hundred times greater* than the pair's loop resistance.

Running the K-Test

After performing an initial RFL test on a pair having a double-sided fault, and whose values meet the K-Test requirements (as in Fig. 4-13), do the following:

1. Press [3] (**K-Test-2W**).

   The tester then runs the first part of the test, performing a nulling bridge operation on the pair *with the far end open*.

   Note

   If one fault resistance is not greater than twice the other, an error message is displayed at this point, and the K-Test cannot be run.

2. If the fault ratio requirement is met, the tester prompts you to connect a far-end T-R short. The unit may be powered down at this time, as with other RFL options, and the test resumed (**Continue Prev. Test**) after the short is connected.

3. With the strapping prompt screen displayed, press [TEST START STOP].

   This starts the second part of the K-Test, during which the tester measures loop resistance and performs a nulling bridge operation on the pair *with the far-end shorted.*

   After completion, the tester displays resistances to the fault and strap, as in the normal RFL process.

4. Press [1] (**Distance to Fault**) to view distances, as is normally done.

Load Coils Test

The Load Coils test performs a frequency sweep of the pair (either spare or working POTS) to determine the number of load coils present, and the approximate distance to the first coil.

Setting Up a Load Coils Test

The Load Coils test requires that the *predominant* wire-gauge to the first load coil be entered in Setups, for the most accurate distance-to-first-load results.

Load Coils Test Results

To run the Load Coils test, select the test on the POTS Toolbox and press [TEST START STOP]. Figure 4-21 shows the results of a Load Coils test that was conducted on a pair with six loads:

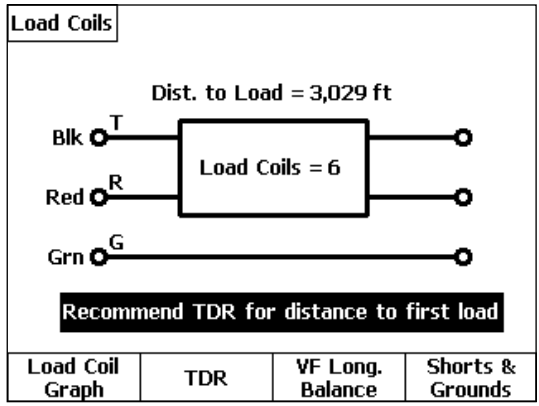

acy33s.eps

Figure 4-21. Load Coils Test Results

Figure 4-21 shows that six load coils were detected, with 3029 feet to the first. From this result screen, you can do the following:

a) Press [,] (**Load Coil Graph**) to view a frequency sweep graph of the test results, like that shown in Figure 4-22:

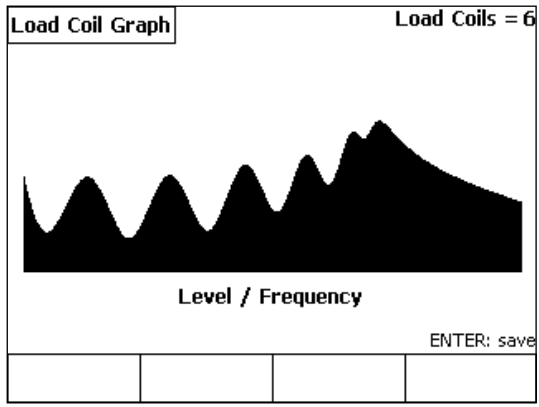

acy34s.eps

Figure 4-22. Load Coil Graph: 6 Loads

Each *negative dip* followed by a *positive peak* represents a single load coil. The pair depicted in Figure 4-22 has six sets of these dip-and-peak combinations, revealing the detected six loads. The farthest load is represented on the extreme right side of the waveform, and will always have a relatively smaller dip and peak.

Note

At times, small dips or peaks may be missed by the counter, yet be visually seen in the graph. Also, the presence of an abnormally high amount of metallic battery noise on working POTS lines may cause the counter to register a high false number of loads, but the actual number may be visually determined by looking at the graph.

b) Press [2] (**TDR**) to go directly to the TDR menu, which allows a more accurate distance to the first coil to be measured.

c) Press [3] (**VF Long. Balance**) to check for possible mis-loading due to the presence of half-loads.

d) If a "Resistive Fault" message appears, press [4] (**Shorts & Grounds**) to measure the value of the fault.

Loop Devices Test

The Loop Devices test detects the presence of the following devices:

- Loop treatment devices on working POTS pairs such as Loop Extenders and Range Extenders with Gain (REGs).
- Fault-sectionalizing devices, such as Maintenance Termination Units (MTUs) and Network Interface Devices (NIDs).
- Mechanical Bell Ringers (C4 and C5).

Setting Up a Loop Devices Test

The Loop Devices test has no test-specific setups.

Loop Devices Test Results

To run the Loop Devices Test, select it on the POTS Toolbox and press [TEST].

Upon completion of the test, the tester displays a result screen that lists each loop device and indicates whether or not it was detected on the test pair. A **Y** indicates that the device was detected, and an **N** indicates that the device was not detected.

Leakage Stress Test

The Leakage Stress test is a continuous resistance test that uses a higher test voltage than normal, in order to "punch through" a potential metallic wire fault that has oxidized over time. During normal resistance testing, this type of fault typically does not show up on a spare pair. However, it does gradually appear under sustained application of C.O. battery voltage after being cut into service as a supposedly "good" pair.

Setting Up a Leakage Stress Test

To set up a Leakage Stress test, select the test on the POTS Toolbox and press [4](**Setups**). The test has one setup parameter, which is listed in Table 4-6.

Table 4-6. Leakage Stress Test Setup Parameter

Parameter	Settings (default in bold)
Leakage Fault Pass Threshold	**500** kΩ

Leakage Stress Test Results

To run the Leakage Test, select the test on the POTS Toolbox and press [TEST].

Figure 4-23 shows results from a Leakage Stress test that was conducted on a faulty pair:

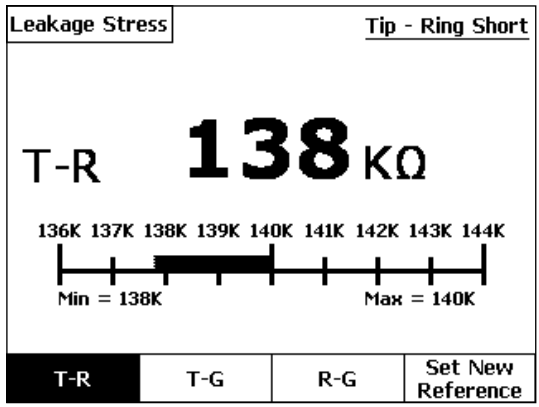

acy35s.eps

Figure 4-23. Leakage Stress Test Results: Faulty Pair

Note that the T-R resistance fault initially started at a reading of 140 kilohms, but during the applied stress voltage its value decreased to 138 kilohms. This reduction indicates the presence of a T-R short that has oxidized.

Under normal resistance fault testing, the T-R short would not be detected. After stress testing, a fault of this type usually remains long enough so that you can run an RFL test to determine its exact location.

1. Press [2] (**T-G**) to continuously stress the Tip-to-Ground leg.
2. Press [3] (**R-G**) to continuously stress the Ring-to-Ground leg.

Tracing Tone Test

The Tracing Tone test places a warbled, high-level ID tone on a test pair. You can choose to apply the following types of tones:

- [1] (**Simplex**): Tone applied equally on T & R with respect to G (non-intrusive)
- [2] (**T-G**): Tone applied only between Tip and Ground
- [3] (**R-G**): Tone applied only between Ring and Ground
- [4] (**T-R**): Tone applied only between Tip and Ring (audible).

Setting Up a Tracing Tone Test

The Tracing Tone test has no test-specific setup.

Running a Tracing Tone Test

To run a Tracing Tone test on a pair, do the following:

1. Select **Tracing Tone** from the POTS Toolbox, then press [ENTER].
2. Press the softkey for the type of tone you want to apply, then press [TEST].

   A diagram depicting the selected mode is displayed. The transmitting arrow indicates that the tone is being applied.
3. To stop sending the selected tone, press [TEST].

VF Noise Test

This test performs a “snapshot” measurement of the voice frequency Metallic Noise (Nm) and Power Influence (PI) on the pair.

Setting Up a VF Noise Test

To set up a VF Noise test, select the test on the POTS Toolbox and press 4 (**Setups**).

Refer to Table 4-7 for VF Noise test setup parameters.

Table 4-7. VF Noise Test Setup Parameters

Parameter	Settings (default in bold)
Termination Impedance	**600 Ω** or 900 Ω
Termination Mode	**Terminated** or Bridged
Measurement Filter	**C-Msg**, C-Notched, 3K Flat, 15K Flat
Nm Pass Threshold	≤ **30** dBrn (Range = 0 to 99)
P.I. Pass Threshold	≤ **80** dBrn (Range = 0 to 99)
Power Harmonics Units	**dBm** or **dBrn**
PH C-Message Filter	**No** or **Yes**

VF Noise Test Results

To run the VF Noise Test, select the test on the POTS Toolbox and press [TEST].

Figure 4-24 shows an example of a VF Noise test results screen. In this example, the pair has acceptable Metallic Noise (Nm), but the Power Influence (PI) value is above the acceptable threshold as defined in Setups.

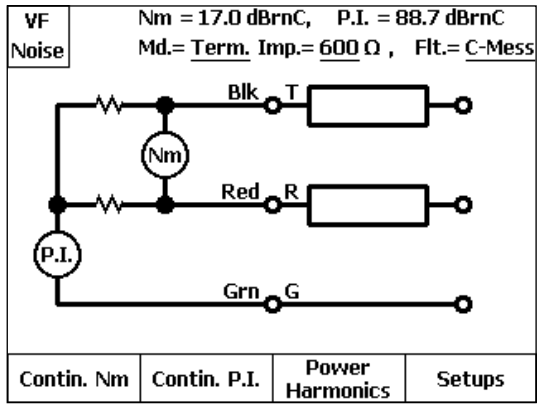

acy36s.eps

Figure 4-24. VF Noise Test Results

From this screen, you can run other tests:

- Press [1](**Contin. Nm**) to run a continuous Metallic Noise test.
- Press [2](**Contin. P.I**.) to run a continuous Power Influence test.
- Press [3](**Power Harmonics**) to see the individual harmonic frequencies that combine to make up the Power Influence noise measurement.

Power Harmonics Test

The Power Harmonics test is available as a softkey test option on the VF Noise test result screen. The test shows values of both odd and even power frequency harmonics in the voice frequency band.

After running the VF Noise test, press 3 (**Power Harmonics**) to obtain a snapshot graph of all power frequency harmonics on the line. The test is made from Tip and Ring to Ground, with optional C-Message filter and units of measure selected in VF Noise Setups. The fundamental frequency (50 / 60 Hz) is automatically derived from the selected Language / Country in **USER OPTIONS**.

Figure 4-25 illustrates a typical set of Power Harmonics on a working POTS pair with a normal degree of harmonics, due to inductive power line coupling.

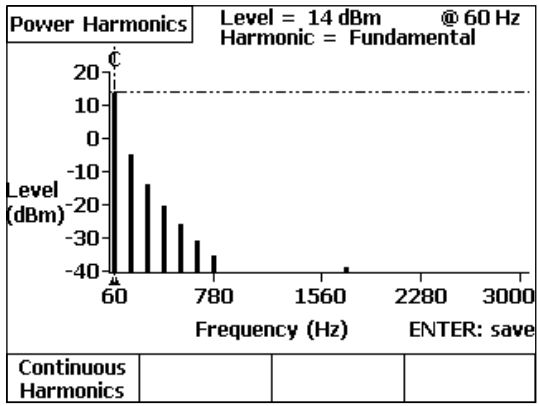

acy99s.eps

Figure 4-25. Power Harmonics Test Results

Note that the fundamental coupling frequency (60 Hz) is the largest signal present, as is normally the case when electromagnetic fields around power lines couple *inductively* into the telephone cable. With normal inductive coupling, the *odd harmonics* (3rd, 5th, 7th, etc.) are predominant, and have exponentially decreasing levels as shown in Figure 4-25.

Metallic coupling due to power line crosses will exhibit a high fundamental content, but will have little or no harmonic frequency content.

Coupling due to AC current in the cable sheath, caused primarily by large earth return currents from *unbalanced 3-phase power lines*, will exhibit high fundamental content as well as *both* odd and even harmonics.

Press [1] (**Continuous Harmonics**) to view changing harmonics in real-time.

VF Loss Test

The VF Loss test requires that a manually-controlled VF transmitting device (such as another CopperPro tester or the C9925BLT) be connected at the far end of the pair. The device must be capable of transmitting single tones at a level of 0 dBm at 600Ω. The CopperPro tester measures the signal level at the near end and translates it into dB of insertion loss, assuming a 0 dBm transmit level.

Setting Up a VF Loss Test

To set up a VF Loss test, select the test in the POTS Toolbox and then press [4] (**Setups**). Follow the instructions under "Displaying a Setup Menu" in Chapter 3. Table 4-8 describes the setup parameters for the test.

Table 4-8. VF Loss Setup Parameter

Parameter	Settings (default in bold)
Termination Impedance	**600** Ω or 900 Ω
Loss Pass Thresh., 1004 Hz	< **10.0** dB (Range = 0.0 to 49.9 dB)

Running a VF Loss Test

To run a VF Loss test, complete the following:

1. Select **VF Loss** from the POTS Toolbox, then press [ENTER].

   A connection diagram is displayed, as shown in Figure 4-26:

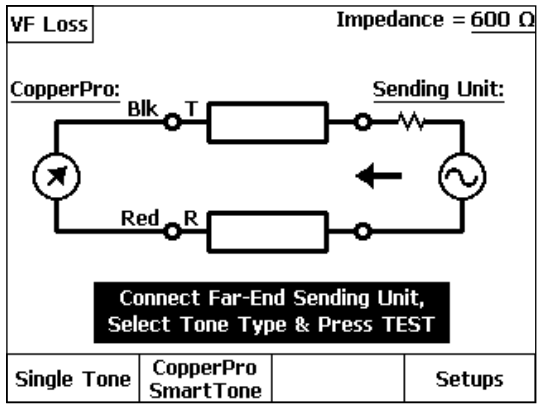

acy108s.eps

Figure 4-26. Connection Diagram for the VF Loss Test

2. Connect the far end sending unit as shown in the diagram.
3. Do one of the following:
   - Select [1] (**Single Tone**) if the sending unit is to send a single frequency.

     OR

   - Select [2] (**CopperPro SmartTone**) if the sending unit is a CopperPro tester.
4. Instruct the sending unit to send the tone or tone-set, then press [TEST].

VF Loss Test Results

The **Single Tone** VF Loss test measures the insertion loss of the pair at the detected frequency, and displays the result in the upper right corner of the screen as shown in Figure 4-27.

The **CopperPro SmartTone** loss test measures the 100-tone composite frequency set transmitted by another CopperPro tester, and displays a complete graph of the results. This test, in addition to being much faster than tests which send and measure one tone at a time, has enough resolution to catch significant faults (such as a loaded bridge tap) that can easily be missed by N-Tone loss /slope tests.

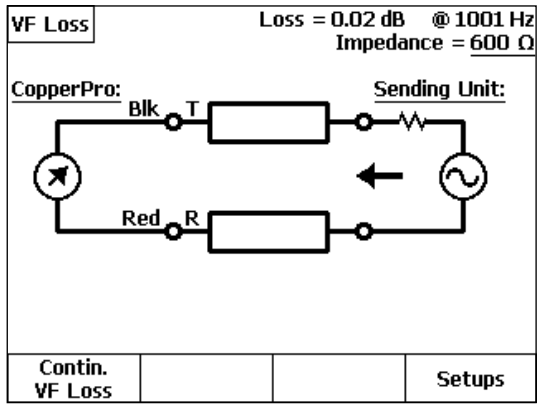

acy97s.eps

Figure 4-27. VF Loss Test Results

Press [,] (**Contin. VF Loss**) to view continuous loss results.

VF Longitudinal Balance Test

This test applies a locally-generated common-mode disturbing tone to the pair, and simultaneously measures the metallic noise caused by this tone. Longitudinal balance is the difference in dB between the two signals.

Setting Up a VF Longitudinal Balance Test

To setup a Longitudinal Balance Test, select the test on the POTS Toolbox and press [4](**Setups**). Refer to Table 4-9 for setup parameters.

Table 4-9. VF Longitudinal Balance Setup Parameters

Parameter	Setting (default in bold)
Pass Threshold	**≥60 dB** (Range = 0 to 80)
Disturbing Frequency	**1000 Hz** (Range = 200 to 2500)

VF Longitudinal Balance Test Results

To run the VF Long.Balance Test, select it on the POTS Toolbox and press [TEST].

Figure 4-28 shows VF Longitudinal Balance test results on a good pair. The Longitudinal Balance result is shown in the upper right corner of the screen, along with setup information.

Vg represents the locally applied disturbing tone, and **Vm** is the resulting metallic signal due to resistive or capacitive imbalance to Ground.

Longitudinal Balance (dB) = **Vg** (dBm) – **Vm** (dBm)

Press [1](**Contin. VF Long. Bal.**) to view continuous test results.

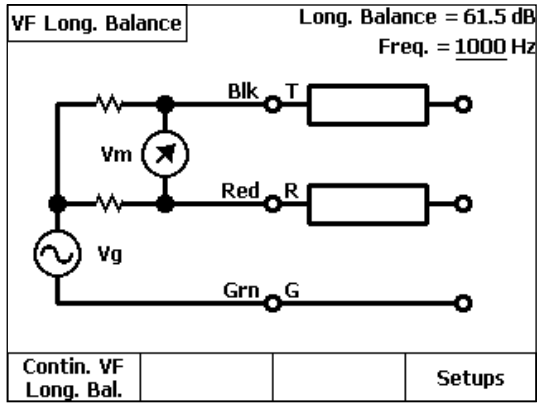

acy98s.eps

Figure 4-28. Longitudinal Balance Test Results: Good Pair

Send VF Tone Test

In this function, the CopperPro tester generates a variety of precision single tones, swept tone sets, or a composite VF tone set.

Setting Up a Send VF Tone Test

To set up a VF Tone, select it on the POTS Toolbox and press 4 (**Setups**). Refer to Table 4-10 for the setup parameter for this function.

Table 4-10. Send VF Tone Setup Parameter

Parameter	Setting (default in bold)
Term. Impedance	**600 Ω** , 900 Ω

Running a Send VF Tone Test

To send a VF Tone, do the following:

1. Select **Send VF Tone** in the POTS Toolbox, then press [ENTER].

   The **Send VF Tone** screen is displayed as shown in Figure 4-29.

2. Press the softkey for the desired tone (see Table 4-11 for descriptions). Press [4] (**More**) to view the second screen of tone selections.

3. Press [TEST].

   The tester displays an arrow to indicate the tone is being sent.

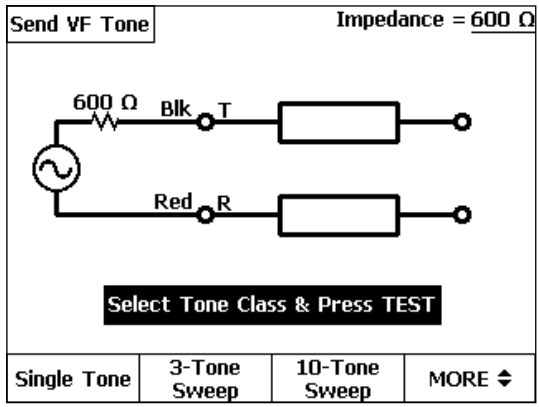

acy38s.eps

Figure 4-29. Send VF Tone Screen

Table 4-11. Types of VF Tones

Tone	Description
Single Tone	• Continuously transmitted single tone • Settable level from +3 to -20 dBm • Settable frequency from 24 Hz to 20 kHz
3-Tone Sweep	• Sequence of 3 tones, each lasting four seconds • 404, 1004, 2804 Hz • 0.0 dBm fixed level per tone
10-Tone Sweep	• Sequence of 10 tones, each lasting three seconds • 404, 804, 1004, 1204, 1404, 1604, 1804, 2004, 2804, 3004 Hz • 0.0 dBm fixed level per tone
30-Tone Sweep	• Sequence of 30 tones, each lasting two seconds • 304 Hz to 3304 Hz (in 100 Hz increments) • 0.0 dBm fixed level per tone
SmartTone	• Composite signal (100 simultaneous tones) • 300 Hz to 3400 Hz, Preset levels

Loop Current & Ground Ohms Test

In the Loop Current and Ground Ohms test, the tester measures and displays the following parameters on a working POTS line:

- **Loop Current** (into 430Ω)
- **Ring-Ground Current** (into 430Ω)
- **Ground Ohms** (Cable sheath resistance from measurement point to C.O.)

Setting Up a Loop Current & Ground Ohms Test

1. From the POTS Toolbox, select **Loop Cur. & Gnd Ω** and press 4 (**Setups**).

   The **Setups – Loop Current & Ground Ohms** screen is displayed.

2. Enter the desired setup values (see Table 4-12).

Table 4-12. Loop Current & Ground Ohms Setup Parameters

Setup Parameter	Setting (default in Bold)
Loop Current Pass Threshold	**>20** mA (Range = 1 to 100 mA)
R-G Current Pass Threshold	**>33** mA (Range = 1 to 100 mA)
Ground Ohms Pass Threshold	**<25** Ω (Range = 0 to 99Ω)

Running a Loop Current & Ground Ohms Test

1. From the POTS Toolbox, select **Loop Cur. & Gnd Ω**, and press [TEST].
   - If the T-R DC Voltage measured was not Idle POTS as specified in DCV Setups, the tester displays a message asking you whether or not to proceed, to avoid disruption of a possible non-POTS service.
   - If you select **Yes** to continue, and there is insufficient T-R voltage to yield a meaningful measurement, the tester displays a **No T-R Voltage** message.
   - Otherwise, the tester displays a result screen listing the three test results.
2. Press the desired function softkey to view continuous test results for any of the three tests.

Dial-Up Test Group

The Dial-Up Test group consists of terminated VF transmission tests that are conducted on idle working POTS lines. These tests operate by dialing various C.O. equipment, with the exception of the DID / DOD tests (*), which are used to test analog PBX trunk facilities. These PBX tests require an optionally-purchased software feature package, described in a separate Users Guide Addendum. The following is a list of test functions in this group:

- Milliwatt VF Loss Test
- Quiet Termination VF Noise Test
- Quiet Termination VF Long. Balance Test
- Number ANI Test
- On-Hook Caller ID Test
- Call Waiting Caller ID Test
- Monitor Line Function
- Smart-Pro Test Group
- SASS Test Group
- DATU Test Group
- DATU EXP Auto-Test

- DID PBX Emulation Test*
- DID CO Emulation Test*
- DOD PBX Emulation Test*
- DOD CO Emulation Test*

To access these tests, select **Dial-up Tests** in the POTS Toolbox, then press [ENTER]. The Dial-Up Test Toolbox is shown in Figure 4-30. The optional DID / DOD tests are shown as "grayed out" and inactive unless the feature package has been installed in the CopperPro tester.

Setting Up a Dial-Up Test

To set up a Dial-Up test, do the following:

1. Enter the setup parameters for all associated subtests shown in Table 4-13:

Table 4-13. Dial-Up Tests and Associated Subtests

Dial-Up Test	Associated Subtests
Milliwatt VF Loss (C.O. Tone sending device)	VF Loss test
Quiet Term. VF Noise (C.O. Quiet Termination)	VF Noise test
VF Long. Balance (C.O. Quiet Termination)	VF Long. Balance test
Number ANI (C.O. Smart-Pro / ANAC device)	None
On-Hook Caller ID (Test line with Caller ID feature)	None
Call Waiting Caller ID (Test line with Caller ID feature)	None

Table 4-13. Dial-Up Tests and Associated Subtests (continued)

Dial-Up Test	Associated Subtests
Monitor Line	None
Smart-Pro Test Group (C.O. Smart-Pro unit)	VF Loss, VF Noise, Caller ID tests
SASS Test Group (C.O. SASS unit)	VF Loss & VF Noise tests
DATU Test Group (C.O. DATU & Switch NTT)	Opens, Shorts & Grounds & other desired tests
DATU EXP Auto-Test (C.O. DATU EXP & Switch NTT)	2-Ended test suite: DCV, ACV, S&G, Opens, VF Noise & Loss, Noise Bal.

2. Select the desired test in the Dial-Up Test Toolbox shown in Figure 4-30, and press [ENTER]. The **Select Dialing Mode** screen is displayed.
3. Press [4](**Setups**) to display the **Setups – Dial-up Tests** screen.
4. Select the desired Dialing parameters, listed in Table 4-14.
5. Press [BACK] twice to return to the Dial-Up Test Toolbox.

Table 4-14. Dial-Up Test Setup Parameters

Setup Parameter	Setting (default in bold)
Dialing Type	**DTMF** or Rotary Dialing
Start Mode	**Loop** or Ground Start
Centrex Dialing	**N** or Y
Centrex Prefix	**None** or user entry (ex.: 9)
Feature Disable Prefix	**None** or user entry (ex.: *82)
Dialtone Detection	**Y** or N
DTMF Duration **(digit on / off times)**	**50** ms (Range = 50 to 250)
Rotary Dial Break / Make Ratio	**60%** (Range = 5 to 95%)

Running a Dial-Up Test

This section describes each Dial-up Test and shows you how to run it. Unless otherwise indicated, follow this procedure to run a test in this group:

1. Select **Dial-up Tests** in the POTS Toolbox, then press [ENTER].
2. Select the desired Dial-Up test from the Dial-Up Toolbox, and press [ENTER].

   The **Select Dialing Mode** screen is displayed.
3. Do one of the following:
   - Press [1](**Auto-Dial**). Select the desired phone number from the displayed **Phone Numbers** list and then press [TEST] to start auto-dialing.

     OR
   - Press [2](**Manual Dial**). Manually dial the telephone number on the tester's keypad and then press [ENTER].

   After the number is dialed, the selected test is performed.

Milliwatt VF Loss	Quiet Term. VF Noise	VF Long. Balance	Number ANI
On-Hook Caller ID	Call Wtg. Caller ID	Monitor Line	Reserved
Smart Pro Tests	SASS Tests	DATU Tests	Reserved
DID PBX Emulation	DID C.O. Emulation	DOD PBX Emulation	DOD C.O. Emulation
Press ENTER to Start			
POTS	XDSL	TDR	Setups

acy40s.eps

Figure 4-30. Dial-Up Test Toolbox

Running a Milliwatt VF Loss Test

1. Select the Milliwatt function and either automatically or manually dial a C.O. Milliwatt phone number as described earlier.

   The tester waits for a fixed post-dialing interval, then automatically measures the Milliwatt frequency and VF line loss of the applied signal.

   After the test is completed, the tester displays a VF Loss Results screen similar to that shown in Figure 4-27.

2. Press [1](**Contin. VF Loss**) to monitor signal loss in real-time.

3. To drop the switch connection and hang up, press [BACK] from the VF Loss results screen.

   The **Select Dialing Mode** screen is re-displayed.

Running a Quiet Term. VF Noise Test

After you select the QT VF Noise function and dial (either automatically or manually) a C.O. Quiet Termination phone number as described earlier, the tester waits for a fixed post-dialing interval, then automatically measures the Metallic Noise (Nm) and Power Influence (PI) on the line.

After the test is completed, the tester displays a VF Noise Results screen similar to that shown in Figure 4-24.

You can now do the following:

- Press [1](**Contin. Nm**) to monitor metallic noise in real-time.
- Press [2](**Contin. P.I.**) to monitor Power Influence in real-time.
- Press [3](**Power Harmonics**) to display a Power Harmonics graph.

To drop the switch connection and hang up, press [BACK] from the VF Noise results screen, and the **Select Dialing Mode** screen is again displayed.

Running a VF Longitudinal Balance Test

After you select the **VF Long. Balance** function and either dial (either automatically or manually) a C.O. Quiet Termination phone number as described earlier, the tester waits for a fixed post-dialing interval, then automatically measures the VF Longitudinal Balance of the line.

After the test is completed, the tester displays a screen similar that shown in Figure 4-28 (VF Longitudinal Balance Results Screen).

You can now press [1] (**Contin. VF Long. Bal.**) to monitor balance in real-time.

To drop the switch connection and hang up, press [BACK] from the VF Long. Balance results screen, and the **Select Dialing Mode** screen is again displayed.

Running a Number ANI Test

The Number ANI (Automatic Number Identification) test allows you to capture and either display, or announce via speaker, the telephone number of the test line.

After you select the Number ANI function and dial (either automatically or manually) a C.O. ANAC (Automatic Number Announcement Circuit) phone number (as described earlier), the tester begins monitoring the line for ANAC DTMF response digits.

Any valid digits received within 20 seconds from the completion of dialing are displayed by the tester and correspond to the telephone number of the line under test.

If the ANAC device is a voice-response-only unit, the tester's internal speaker is connected to allow you to hear the announced number.

The CopperPro tester is compatible with Voice-only, DTMF-only, and Voice / DTMF combination ANAC devices.

The switch connection is automatically dropped after a DTMF ANI number has been received, but *not* after the number announcement of a Voice-only ANAC device type. In this case, you must manually hang up by pressing [BACK].

Running an On-Hook Caller ID Test

The On-Hook Caller ID test enables the tester to receive a call on the test line from another line, then capture and display Caller ID calling party information.

1. Select the On-Hook Caller ID function and then press [ENTER].

   The tester waits indefinitely (in an on-hook condition) for an incoming phone call, which must be placed from another POTS line to the POTS line under test.

   If the test line is equipped with the Caller ID feature, the tester detects the incoming Caller ID information (sent by the C.O. switch) after the first ringing interval. It then displays the received Phone number along with the associated Name, Date, and Message (if included).

2. Press [1](**Timing Details**) to view the following CID signal information:
   - Ringing Duration
   - Ringing to CD (Carrier Detection) Delay
   - CD to Seizure Delay
   - Seizure Duration
   - Seizure Bytes
   - Mark (frequency) Duration
   - Data Duration
   - Data Bytes
3. Press [2](**Raw Data**) to view the raw hexadecimal CID data digits.

If the test line was not equipped with the Caller ID feature, the tester continues to wait until you press [BACK]. If the CID data was garbled, the tester displays an error message after the first ringing interval.

Running a Call Waiting Caller ID Test

The Call Waiting Caller ID test enables the tester to place a call on the test line to a Quiet Termination, wait to be called from another line, then capture and display Caller ID information sent on the line by the C.O. switch.

After you have select the Call Waiting Caller ID function and dial (either automatically or manually) a C.O. Quiet Termination (or other quiet line) as described earlier, the tester waits indefinitely (in the off-hook condition) for an incoming call from another line.

If the test line is equipped with the Call Waiting Caller ID feature, the tester detects the incoming Caller ID information (sent by the C.O. switch), and then displays the received Phone number along with the associated Name, Date, and Message (if included).

- Press [1] (**Timing Details**) to view CID signal information, as above.
- Press [2] (**Raw Data**) to view the raw hexadecimal CID data digits.

If the test line was not equipped with the Call Waiting Caller ID feature, the tester continues to wait for incoming data. If the Caller ID data was garbled, the tester displays an error message.

To hang up, press [BACK] from the Caller ID results screen.

Running a Line Monitor Function

The Monitor Line function provides a high-impedance, non-intrusive method for monitoring the audio status of a spare or working POTS pair. It is not technically a Dial-Up test, but is most often used on working POTS lines, and is therefore included in this group.

1. Select **Monitor Line** in the POTS Toolbox, press [ENTER].

   The tester's internal speaker is connected to the test line at this point, with a "Monitor Enabled" message displayed on the screen.

2. To stop the Monitor function, press [TEST START STOP] or [BACK].

Smart-Pro Tests

The tests in this group enable the tester to dial a C.O.-based Fluke Networks Smart-Pro unit and run various VF tests over a working POTS line.

The following procedure shows you how to dial a Smart-Pro and run a 10-Tone Slope test. Other Smart-Pro tests are performed in a similar manner.

To run a 10-Tone Slope test, do the following:

1. From the Dial-Up Test Toolbox, select **Smart-Pro Tests** and press [ENTER].

   The **Smart-Pro Menu** is displayed, with tests listed in Table 4-15:

Table 4-15. Smart-Pro Tests

Test	Description
N-Tone Slope	The Smart-Pro applies a sequential set of 3, 10, or 30 tones to the line. The CopperPro tester measures the Frequency, Loss, and Slope of these tones.
SmartTone Loss	The Smart-Pro applies a composite set of 100 VF tones to the line. The CopperPro tester measures and displays a VF Loss Graph.
Quiet Term. VF Noise	The Smart-Pro applies a quiet termination to the line for 20 seconds. The CopperPro tester measures Nm and P.I. on the pair.
Caller ID Callback	The Smart-Pro receives a command to return a call back to the test line. It then issues a 3 second audible tone to prompt you to hang up for the return call. Press [ENTER] to hang up. The tester then automatically captures and displays Caller ID information sent during the call.

2. Press [1](**N-Tone Slope**).

   The **Select Dialing Mode** screen is displayed.

3. Select a method of dialing. Do one of the following:

- **Auto-Dial** - If you want the tester to automatically dial the number of the C.O Smart-Pro, press [1](**Auto-Dial**). Select the telephone number from the displayed list, then press [TEST].
- **Manual Dial** - If you want to manually dial the number of the C.O. Smart-Pro, press [2](**Manual Dial**). Dial the number from the tester's keypad, then press [ENTER].

After the tester successfully connects, the Smart-Pro announces the calling number and prompts you to enter the test code for the test you want to run.

Smart-Pro tests and their corresponding test codes are listed in Table 4-16:

Table 4-16. Smart-Pro Test Key Commands

To run this test	Press this key
Milliwatt	1
Quiet Termination	2
3-Tone Sweep	3
10-Tone Sweep	4
30-Tone Sweep	5
SmartTone	6
Callback	7
Keypad	8

4. To start a 10-Tone Slope test, press **4** (for the 10-Tone Sweep) and then press [ENTER].

   The tester measures the frequency, loss, and slope of each tone it receives and displays results in real time, as shown in Figure 4-31:

SP N-Tone Slope — Impedance = 600 Ω

Tone #	Freq. - Hz.	Loss - dB	Slope - dB
1.	404	4.5	-1.5
2.	804	5.3	-0.7
3.	1004	6.0	0.0
4.	1205	6.7	0.8
5.	1405	7.6	1.6
6.	1603	8.6	2.6
7.	1804	9.6	3.7
8.	2004	10.7	4.8
9.	2801	15.4	9.5
10.	3003	16.6	10.7

VF Loss Graph	VF Slope Graph		

acy43s.eps

Figure 4-31. Smart-Pro N-Tone Slope Test Results

   Failing slope and 1004 Hz loss values are identified in flashing reverse-video format.

5. Press [1] (**VF Loss Graph**) or [2] (**VF Slope Graph**) to view detailed graphs of the Loss and Slope, respectively.

SASS Tests

The SASS (Single Access Service System) tests enable the tester to dial a C.O.-based Fluke Networks SASS unit for similar VF tests over a working POTS line.

To run tests in this group, follow the above procedure for “Smart-Pro Tests”. When prompted, enter the desired test code from Table 4-17.

Table 4-17. SASS Test Key Commands

To run this test:	Press key(s):
Milliwatt	86
Quiet Termination	85
3-Tone Sweep	83
10-Tone Sweep	80
Programmable Sweep	87
Callback	7
Keypad	5

DATU Tests

The DATU (Direct Access Test Unit) tests enable the CopperPro tester to dial a C.O.-based Fluke Networks DATU over a working POTS line. The DATU can then be instructed to access the line-under-test (through the switch Test Trunk), split off the battery feed circuit, and apply selectable terminations for an entered time period.

To run a DATU test, do the following:

1. From the Dial-Up Test Toolbox, select **DATU Tests** and press [ENTER].

   The **DATU** test selection screen is displayed.

2. Do one of the following:

   - Press [1] (**Automatic Open**), then, follow the on-screen prompts and instructions.

     This test allows the DATU Auto-Open or "dry line" number (typically a unique number that is separate and distinct from the normal DATU access number) to be dialed from the test line. After the number is dialed, the battery feed circuit is split from the line for one to two minutes (with no termination applied).

     Note

     To verify access and splitting, run the Continuous DCV test until you see that the T-R battery voltage has been removed. Next, run a POTS Auto-Test on the test line to quickly give you the most information before battery voltage is restored, following the timeout.

     OR

   - Press [2] (**Manual Termination**), then, follow the on-screen prompts and instructions.

     This test allows the DATU's normal access number to be dialed, after which you can instruct it to apply a specific metallic termination to the test line for the entered time period.

During the test, supply the following as prompted by the DATU:

- Password (if required)
- Phone number of the line under test
- Termination code (see table below)
- Number of minutes (**Hold Time**) to apply the termination.

Table 4-18 lists the terminations that the DATU can apply:

Table 4-18. DATU Manual Termination Codes

To run this test	Press key(s)
Open Line	6
Short Line	7
Short & Ground Line	33
Ground Ring	37
Ground Tip	38
Hi-Level TR Tone	44
Hi-Level RG Tone	47
Hi-Level TG Tone	48

3. When prompted to hang up, press ◯ then [BACK].

   The tester goes on-hook, and you return to the **Main** menu.

4. Wait 30 seconds to allow the DATU to remove battery and apply the termination. Then, run the appropriate tests for the selected termination.

Note

Be sure to complete all testing within the ***Hold Time*** *period, or the tester could report erroneous measurement results.*

DATU EXP Auto-Test

The DATU EXP Auto-Test is a fully automated sequence of parametric and VF transmission tests, some of which are performed at the field end by the dialing CopperPro tester, and others performed at the C.O. end by the Fluke Networks DATU EXP test head. All test results are shared with and displayed by the CopperPro tester, as well as stored by the DATU EXP. This stored data may then be accessed by Telco OSS databases for reporting and administration.

In the DATU EXP Auto-Test, the CopperPro tester provides the same test functionality as the Fluke Networks Insight EXP™ field test set, when used in conjunction with a C.0.-located DATU EXP test head. The three basic test sequences provided are:

1. **Loop Test**: Initial line test, comprised of three groups of tests -
    a. CopperPro tester pre-tests before dialing the DATU EXP:
        i. ACV, DCV, & Loop Current.
    b. CopperPro Channel Tests after dialing the DATU EXP:
        i. VF Metallic Noise, Power Influence, Loss & Longitudinal Balance.
    c. DATU EXP Trunk Tests after removing line battery feed:
        i. ACV, DCV, Capacitance, Loop Resistance, Ground Resistance, Leakage Resistance, & Load Coil Measurement.
2. **5 - Step Test**: Comprised of two groups of tests -
    a. CopperPro Pre-Tests before dialing the DATU EXP:
        i. ACV, DCV, & Loop Current.
    b. CopperPro Channel Tests after dialing the DATU EXP:
        i. VF Metallic Noise, Power Influence, Loss & Longitudinal Balance.
3. **Final Test**: Same as Loop Test, but after repairs completed (Closeout test)

Setting Up the DATU EXP Auto-Test

To set up the DATU EXP Auto-Test, select it on the Dial-Up Menu and press [ENTER]. Then press [4](**Setups**), and enter the settings Table 4-19:

Table 4-19. DATU EXP Auto-Test Setup Parameters

Setup Parameter	Setting
Technician ID #	(any 16 digit alphanumeric string)
Password	(any 16 digit alphanumeric string)
DATU EXP Access #	(Telephone Number, up to 16 digits)

Running the DATU EXP Auto-Test

This section describes the operation of the Loop Test, but 5-Step and Final Test operation is essentially the same.

1. Select **DATU EXP Auto-Test** on the Dial-up Test Toolbox, and press [ENTER].
2. Press the **Loop Test** softkey to start the testing sequence.

   The tester displays continuous test activity and status messages to indicate test progress.

Results from a typical Loop Test are shown in Figure 4-32:

DATU EXP Loop Test **Test Completed**

Test	T/G	R/G	T/R	S
	Before DIAL IN			
VAC	0.15	0.82	0.68	P
VDC	-49	0.04	-48	P
mA			-16	F
	After DIAL IN			
VAC	0.00	0.00	0.00	P
VDC	0.00	0.00	0.00	P
Leak	>10 M	>10 M	>10 M	P
Open	14522	14586	16561	P
LRes			508	-
GRes	257	257		P
Loss			-8.4	P
Noise			8.30	P
PI			31.6	P
LBal			56.1	P
Load			2	P

Advisor	Zoom In	Save Results	Setups

elf43s.bmp

Figure 4-32. DATU EXP Loop Test Results

Terminated VF Tests

Terminated VF Tests are a group of double-ended, voice frequency Auto-Tests that require a far-end terminating device such as the Fluke Networks TN2100 Terminator or TN2200 Terminator II; 3M FED™ or FEDII™; or CMC My Helper™. The tester automatically controls the Terminator, FED™ and Helper™ over the same pair. Therefore, a separate control pair is not required.

During the Auto-Tests, the tester first runs a sequence of single-ended parametric tests. It then conducts a series of terminated VF transmission tests to effectively qualify the pair for voice frequency POTS service. The following individual tests are conducted:

- AC & DC Voltage
- Shorts & Grounds
- Opens
- Load Coils
- VF Noise
- VF Longitudinal Balance

- Tip, Ring, Loop and Ground Resistance
- Resistive Unbalance
- 10-Tone Slope (TN2000 Terminator, FED™, FEDII™, and Helper™)
- SmartTone Loss & Slope (TN2100 Terminator or TN2200 Terminator II)

Setting Up a Terminated VF Test

To set up a test, complete the following:

1. Set the Pass thresholds for each individual test (see previous list).
2. Set up the Auto-Test. Do the following:
   a) From the POTS Toolbox, select **Terminated VF Tests** and press [ENTER].
   b) From the **Select Terminated Test Type** screen, press [4](**Setups**).
   c) Enter a setting for Loop Resistance, Ground Resistance, and Unbalance Resistance Pass Thresholds.

Running a Terminated VF Test

This procedure shows you how to run a **Terminator VF Auto-Test**. *You can use this procedure to run the Terminated VF Test with any of the other far-end devices listed.*

To run a Terminated VF Test, do the following:

1. From **Select Terminated Test Type,** press [1](**Terminator VF Auto-Test**).

   The Terminator VF Auto-Test connection diagram is displayed as shown in Figure 4-33:

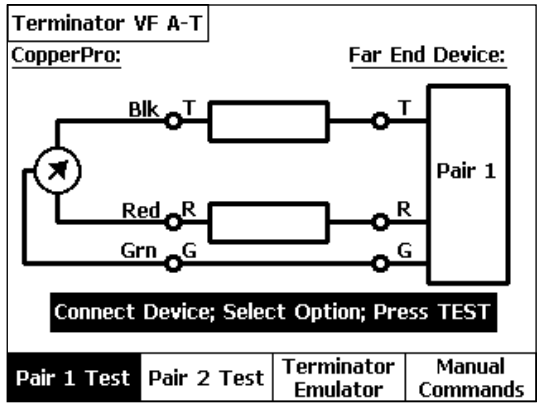

acy107s.eps

Figure 4-33. Terminator VF Auto-Test Selection Screen

2. Connect the CopperPro tester and Terminator (Far End Device) as shown in the connection diagram, connecting both units to either one or two test pairs.
3. Select either 1 (**Pair 1 Test**) or 2 (**Pair 2 Test**), then press TEST.

   The CopperPro displays the test it is currently running, and when completed, displays a Summary Result screen like that shown in Figure 4-34:

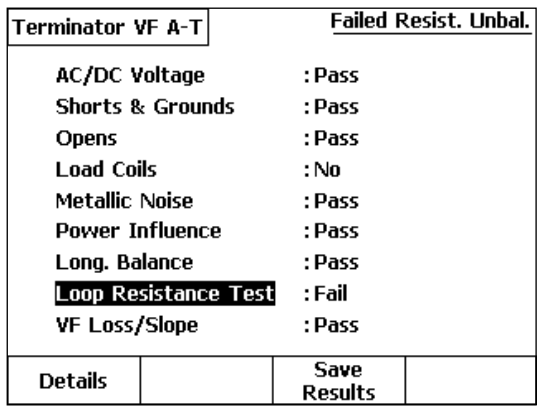

acy100s.eps

Figure 4-34. Terminator VF Auto-Test Summary Results

The first failed test is highlighted by the cursor (**Loop Resistance** in this case), with a failure description in the upper right corner of the screen (**Failed Resist. Unbal.**).

4. To view detailed results for a test, follow the procedure listed earlier in this chapter under the POTS Auto-Test section.

   Detailed results for the VF Loss / Slope test are shown in Figure 4-35:

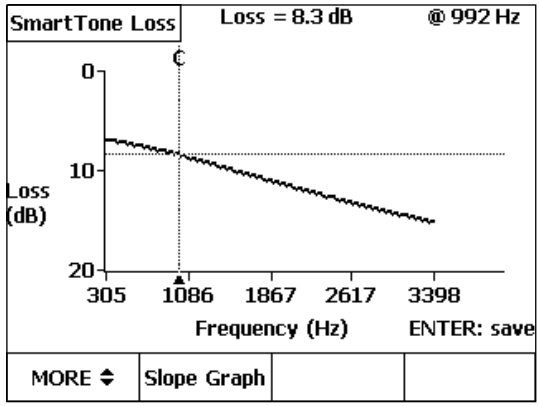

acy103s.eps

Figure 4-35. Terminator VF Auto-Test Results: Smart Tone Loss

5. Press [2] (**Slope Graph**) to view the VF Loss results in terms of Slope.
6. Press [ENTER] to return to the Summary Results screen.

Saving Terminator VF Auto-Test Results

As indicated earlier in the chapter, Auto-Test results are *not* automatically saved. Follow the same instructions under “Saving POTS Auto-Test Results” to save the Terminator Auto-Test results.

Using the CopperPro Tester as a Terminator

In the absence of a Terminator, you can use another CopperPro tester as a substitute by placing it in the "Terminator Emulator" mode. To do this, perform the following:

1. From the Terminator VF Auto-Test Selection screen (Figure 4-33), press [3] (**Terminator Emulator**).

   The Terminator Emulator screen is displayed. In this mode, the CopperPro tester is monitoring Pair 1 for DTMF commands from the testing CopperPro tester at the far end, in order to run a terminated Auto-Test.

   Terminator Emulator activity states are as follows:

   - **Idle** – If the Emulator is neither receiving commands from a CopperPro tester nor applying a requested termination, it displays an **Idle** message on its screen.
   - **Test in Progress** – If the Emulator is either receiving commands from a CopperPro tester or is applying a requested termination, it displays a **Test in Progress** message.

   Note

   In the Terminator Emulator mode, the CopperPro tester places a certain impedance on the test pair due to its DTMF receiver circuit. This impedance is approximately 100 Ohms of resistance from Tip to Ring, and can be used to verify that the Emulator is connected prior to running a terminated Auto-Test. During the Auto-Test, this impedance is automatically removed to keep test results from being adversely affected.

2. To exit the Terminator Emulator mode, press [TEST START/STOP] or [BACK].

Manually Controlling a Far-End Terminator

For more detailed fault analysis, it may be necessary to manually control a Terminator (or Terminator Emulator) from the testing CopperPro tester and run individual tests on the pair rather than running an Auto-Test.

To control the Terminator using manual commands, do the following:

1. From the Terminator VF Auto-Test Selection screen (Figure 4-33), press [4] (**Manual Commands**).

   The **Manual Term. Commands** screen is displayed.

2. Select the desired **Terminator Function** (refer to the list in Table 4-20), and the desired time **Duration** for the function. Then, press [TEST].

   The CopperPro tester signals the Terminator to apply the selected termination for the selected time, and then displays a **Termination Applied** message.

3. Press [BACK] and run the appropriate tests for the selected termination or tone.

Table 4-20. Manual Terminator Commands

To apply this termination:	Select this function:
Short	**Ring–Tip Short**
Ring Ground	**Ring Ground**
Tip Ground	**Tip Ground**
Short & Ground	**Tip & Ring Ground**
VF Quiet Termination	**Quiet Term.**
WB Quiet Termination	**WB Quiet Term.**
Open Line	**Open Circuit**

Table 4-20. Manual Terminator Commands (continued)

To apply this termination:	Select this function:
Voiceband Tone	**VF Single Tone** • Frequency (24 Hz to 20 kHz) • Impedance (600Ω or 900Ω)
Wideband Tone	**WB Single Tone** • Frequency (10 to 1200 kHz) • Impedance (100Ω or 135Ω)
Broadband Tone*	**BB Single Tone** • Frequency (128 kHz to 18 MHz) • Impedance (100• or 135•)
SmartTone (100-Tone sig.)	**SmartTone**

* Requires TN2200 Terminator II or CopperPro Series II Tester in T.E. mode

Chapter 5
XDSL Testing and Loop Qualification

Introduction

The tests described in this chapter can help you determine a cable pair's ability to carry modern high-speed digital services.

The chapter begins by showing you how to set up and run a DSL Auto-Test. Like the POTS Auto-Test, the DSL Auto-Test contains a series of individual tests. However, the DSL Auto-Test is a double-ended test, requiring a far-end terminating device. As a general practice, you can use this Auto-Test to obtain a quick overall assessment of the transmission capabilities of a cable and its suitability for various grades of service. You are then instructed on how to run a DSL Modem Test, which uses the Fluke Networks 990-GM/2 ADSL2+ golden modem appliqué to connect with a working ADSLx DSLAM and provide line transmission statistics.

The second half of this chapter focuses on the individual tests in the XDSL Toolbox. This toolbox contains both single-ended physical parametric tests and double-ended wideband and broadband transmission tests. As a group, the tests in the XDSL Toolbox are useful for identifying the presence of line trouble that can disqualify a pair from carrying a particular digital service. Additionally, the tests can help you determine the maximum service data rate that a pair is capable of carrying.

DSL Auto-Test

The DSL Auto-Test is a pre-programmed test sequence that requires a Fluke Networks TN2100 Terminator or TN2200 Terminator II, or another CopperPro Series II tester operating in the "Terminator Emulator" mode, as the far-end terminating device. The CopperPro tester automatically controls the Terminator or Terminator Emulator over the test pair.

During the DSL Auto-Test the CopperPro tester first runs a sequence of single-ended parametric tests, followed by optional terminated VF transmission tests, then a series of terminated wideband or broadband transmission tests. These test results are used to effectively qualify the pair for either a specific, user-selected digital service, or a series of digital services in one pass. The following individual tests are conducted:

- AC & DC Voltage
- Shorts & Grounds
- Opens
- Load Coils
- VF Metallic Noise & Power Influence (optional)
- VF Longitudinal Balance (optional)
- Single-tone VF Loss, or SmartTone Loss / Slope (optional)
- Tip, Ring, Loop, & Ground Resistance
- Resistive Unbalance
- Wideband or Broadband Noise / Level
- Single-Frequency WB or BB Loss, or Composite-Tone WB or BB Loss*
- Wideband or Broadband Longitudinal Balance

* Requires TN2100 Terminator or TN2200 Terminator II.

Setting Up a DSL Auto-Test

In this test, pairs are qualified based on Pass Thresholds that are automatically selected for the Service Type chosen. To choose a Service Type, do the following:

1. From the **Main** menu, select **DSL Auto-Test** and then press [ENTER].

   The **DSL Auto-Test Selection Screen** is displayed, shown in Figure 5-1.

2. Press [4] (**Setups**).

   The first DSL Auto-Test **Setups** screen is displayed, shown in Figure 5-2, with the cursor positioned on the **Service Qualified** field.

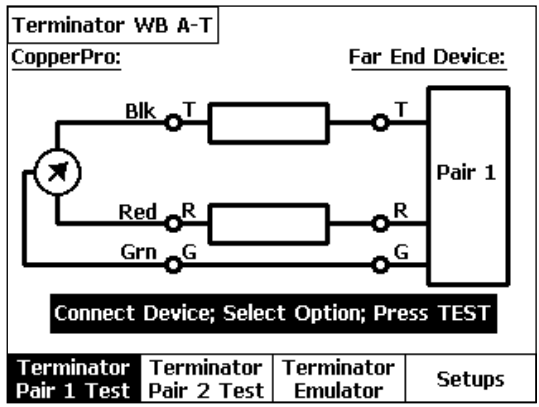

acy53s.eps

Figure 5-1. DSL Auto-Test Selection Screen

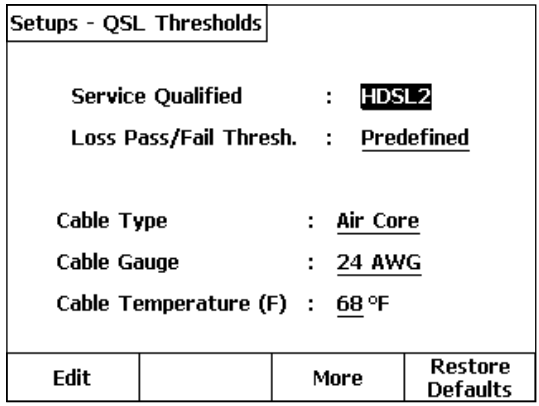

acy54s.eps

Figure 5-2. DSL Auto-Test Setups Screen

3. Press [1] (**Edit**) and use ⊕ or ⊕ to select the desired Service Type to be qualified and then press [ENTER]. Refer to Table 5-1 for supported Service Types and their Qualification Criteria.

Table 5-1. Service Types for Qualification

Service Type	Qualification Criteria
DDS 56 kb/s	• Param. results vs. DDS 56 Pass Thresholds • 28 kHz (Nyquist) Loss & WB Long. Balance
DDS 64 kb/s	• Param. results vs. DDS 64 Pass Thresholds • 32 kHz (Nyquist) Loss & WB Long. Balance
ISDN Basic Rate	• Param. results vs. ISDN-B Pass Thresholds • 40 kHz (Nyquist) Loss & WB Long. Balance
DDS Ext. Reach	• Param. results vs. DDS ER Pass Thresh. • 82 kHz (Nyquist) Loss & WB Long. Balance

Table 5-1. Service Types for Qualification (continued)

Service Type	Qualification Criteria
ADSL, ADSL2	• Param. results vs. ADSL/2 Pass Thresholds • WB Up. & Downstream Est. Data Rates • 138 kHz WB Long. Balance
ADSL2+	• Param. results vs. ADSL2+ Pass Thresh. • 2.2 MHz WB Long. Balance
VDSL	• Param. results vs. VDSL Pass Thresholds • 0.25 MHz to 17.7 MHz WB Long. Balance
HDSL	• Param. results vs. HDSL Pass Thresholds • 196 kHz (Nyquist) Loss & WB Long. Bal.
HDSL2	• Param. results vs. HDSL2 Pass Thresholds • WB Up. & Downstream Loop Attenuation • 196 kHz WB Long. Balance
HDSL4	• Param. results vs. HDSL4 Pass Thresholds • WB Up. & Downstream Loop Attenuation • 196 kHz WB Long. Balance

Table 5-1. Service Types for Qualification (continued)

Service Type	Qualification Criteria
T1	• Param. results vs. T1 Pass Thresholds • 772 kHz (Nyquist) Loss & WB Long. Bal.
Custom	• Param. results vs. User-entered Thresholds • WB / BB Loss & WB Long. Balance @ User-entered Frequency (Nyquist)
All (default)	• Param. results vs. Tightest Pass Thresholds of all above Services except ADSL2+ & VDSL • WB / BB Loss & WB Long. Balance @ Nyquist Frequencies of all above Services

4. From Setup Screen 1, select the **Loss Pass / Fail Thresholds** field. Choose one of the following options:

   a) **Predefined** Thresholds (default) – These Pass / Fail thresholds are factory-predefined for the Service Type chosen, with unique values for each test.

   OR

   b) **Custom** Thresholds – This selection uses existing Pass / Fail thresholds that you have entered in the Setups menu for each of the individual tests in the sequence, allowing the qualification of a new or different Service Type.

5. From Setup Screen 1, enter appropriate selections for **Cable Type, Cable Gauge**, and **Cable Temperature**.

6. Press [3](**More**) to view subsequent Setup screens:

   a) If you chose **Predefined** thresholds in step 4 above, the only remaining Setup screen is the VF Test Selection screen, which enables you to either include (**Y**) or exclude (**N**) the following tests:

      - **VF Noise** (Metallic Noise & Power Influence)
      - **VF Loss** (Single Tone, TN2000; SmartTone, TN2100 / TN2200)
      - **VF Long. Balance**

   b) If you chose **Custom** thresholds in step 4, a third Setup screen is displayed (in addition to the above VF Selection screen), enabling you to enter Pass thresholds for one of the following parameters, depending on which Service Type you selected:

      - Nyquist frequency Loss value for the chosen Service Type.
      - All Nyquist frequency Loss values for Service Type = **All**.
      - Nyquist frequency **and** Loss values for Service Type = **Custom**.
      - Up. & Down. Loop Attenuation values for **HDSL2** & **HDSL4**.

7. Press [BACK] to return to the DSL Auto-Test Selection Screen.

Running a DSL Auto-Test

After selecting the desired Setup options, do the following:

1. Connect the CopperPro tester and Terminator or Terminator Emulator (**Far End Device**) as shown in Figure 5-1. (See Chapter 4, "Using the CopperPro Tester as a Terminator"). Then, connect both devices to either one or two test pairs.

2. Select either [1](**Pair 1 Test**) or [2](**Pair 2 Test**), then press [TEST].

   Note

   Wideband tests (to 1.2 MHz) may be run on either the Pair 1 or Pair 2 test leads. Broadband tests (to 18 MHz) for ADSL2+ and VDSL services must be run on only the shielded Pair 1 test leads.

   The tester displays the test it is currently running.

3. When testing is completed, a Summary Results screen is displayed like that in Figure 5-3 for the **HDSL2** Service Type, using a TN2100:

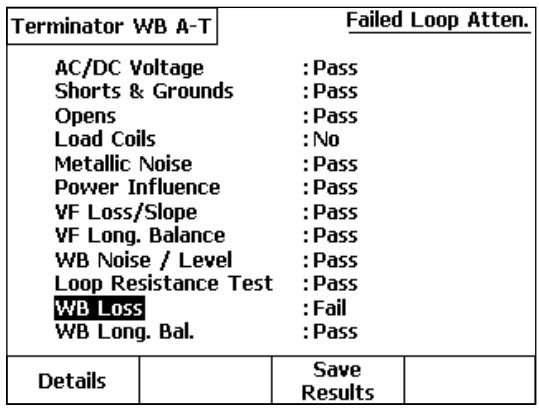

acy55s.eps

Figure 5-3. DSL Auto-Test Summary Results: HDSL2

Note that the pair failed the **WB Loss** test, with a descriptive message in the upper right corner of the screen (**Failed Loop Atten**.).

4. Select the desired test and press [1](**Details**) to view detailed test results. Detailed results for the failed WB Loss test are shown in Figure 5-4.

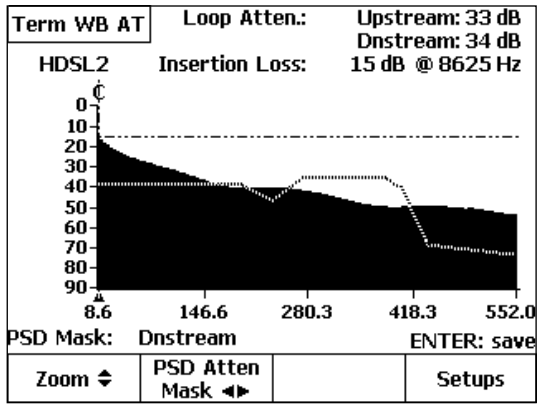

acy56s.eps

Figure 5-4. DSL Auto-Test Loss Results: HDSL2 Loop Attenuation

The **HDSL2** Loss test (using **Predefined** thresholds) runs a comprehensive multi-frequency Loop Attenuation test on the pair. It does this, rather than making the traditional single-frequency Nyquist Loss measurement, in order to more effectively qualify the pair *specifically* for HDSL2 service. The same approach is used for **HDSL4** service qualification.

The Loop Attenuation values displayed in the upper right corner represent an average value of the pair's loss across the Upstream and Downstream frequency bands. In this example, both the Upstream and Downstream Loop Attenuation values are greater than the Pass thresholds, and are displayed in flashing reverse-video format.

5. To superimpose a transmitted Power Spectral Density (PSD) mask on the Loop Attenuation graph, press [2] (**PSD Atten Mask**) and then press ⊕ or ⊖ to overlay either the Upstream or Downstream mask on the graph.

   Figure 5-4 shows the Loop Attenuation graph with the superimposed Downstream PSD mask.

   - The graph itself shows the pair's attenuation across the frequency bands utilized by the HTU-C (Downstream) and HTU-R (Upstream) equipment.
   - The PSD masks show the relative signal power transmitted across the bands by the HTU-C (Downstream) and HTU-R (Upstream) equipment.
   - From visually observing the graph and superimposed mask, it can be seen that the more *dark area* under the mask curve, the *more likely* the pair will be able to carry HDSL2 service due to the lower loss across the band of interest. Conversely, the more *light area* under the mask curve (as in the above example, from 270 to 420 kHz), the *less likely* the pair will be able to reliably carry HDSL2 traffic. This is confirmed by the failure of this test.

6. Press [ENTER] to save the waveform in the **Frequency Graph** storage memory.

DSL Auto-Test Results: ADSL Service Type

The ADSL Loss test (using **Predefined** thresholds) also runs a comprehensive multi-frequency sweep on the pair. It does this rather than making traditional single-frequency Nyquist Loss measurements at the Upstream (138 kHz) and Downstream (1100 kHz) frequencies, in order to more accurately estimate the achievable Upstream and Downstream data rates on the pair.

The process is as follows:

First, loss values at each DMT frequency (tone) bin, along with Wideband Noise measurement data for each bin, enable the tester to generate a Signal-to-Noise Ratio (SNR) graph as shown in Figure 5-5.

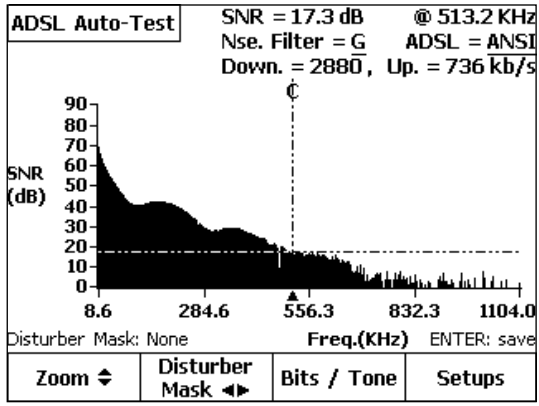

acy57s.eps

Figure 5-5. DSL Auto-Test Loss Results: ADSL SNR Graph

From the SNR values, the tester generates a **Bits / Tone** graph (see Figure 5-6), showing the number of data bits able to be encoded at each bin. Estimated Upstream and Downstream data rates (shown in the upper right corner of Figures 5-5 and 5-6) are generated from the aggregate of encoded data bits across both of the bands.

Press [ENTER] to save any of the above waveforms in the **Frequency Graph** storage memory.

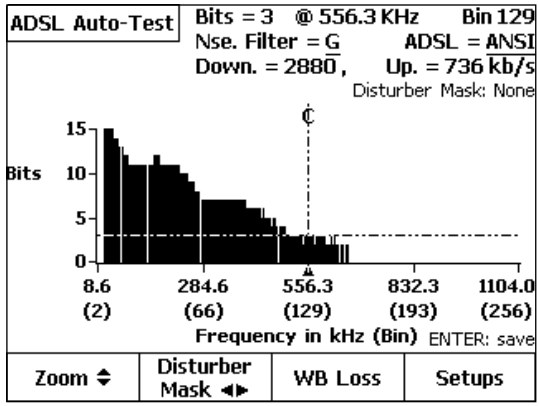

acy58s.eps

Figure 5-6. DSL Auto-Test Loss Results: ADSL Bits/Tone Graph

Disturber Mask Overlays

From any one of the ADSL **Loss**, **SNR**, or **Bits / Tone** graph screens, press 2 (**Disturber Mask**), then press ⊖ or ⊖ to superimpose any of a group of typical disturber masks on the graphs. By comparing the graphs to each type of disturber mask, you can visually determine which type of service on a pair in the same or adjacent binder group may be affecting the pair under test.

DSL Auto-Test Results: All Service Types

To run a rapid qualification summary of *all* Service Types (listed in Table 5-1) (except ADSL2+ & VDSL) in a single pass, select **All** for the **Qualified Service** in the Setup screen in Figure 5-2.

Figure 5-7 shows the detailed Loss results for a typical pair.

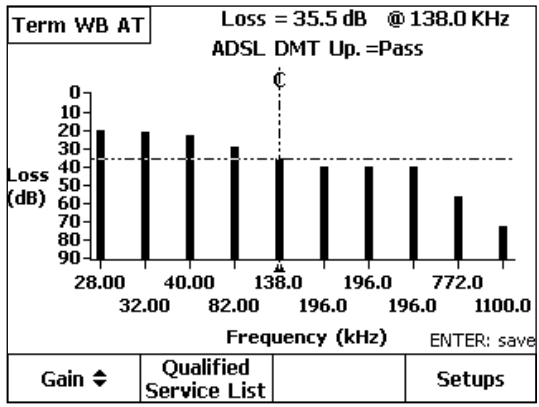

acy59s.eps

Figure 5-7. DSL Auto-Test Loss Results: All Service Types

To rapidly qualify all service types but ADSL2+ and VDSL in a single pass, the CopperPro measures the Nyquist frequency loss of each Service Type, along with other parameters. Each vertical bar in the above figure corresponds to the Nyquist (maximum energy) frequency of a given Service Type. HDSL, HDSL2, and HDSL4 services are all qualified in this test at the same frequency (196 kHz), but have separate Pass thresholds. ADSL2+ and VDSL Service Types must be qualified individually, as they both require a complete frequency sweep.

Press [2] (**Qualified Service List**) to view a list of all Service Types and their qualification status, based on Loss results. Figure 5-8 shows a typical QSL.

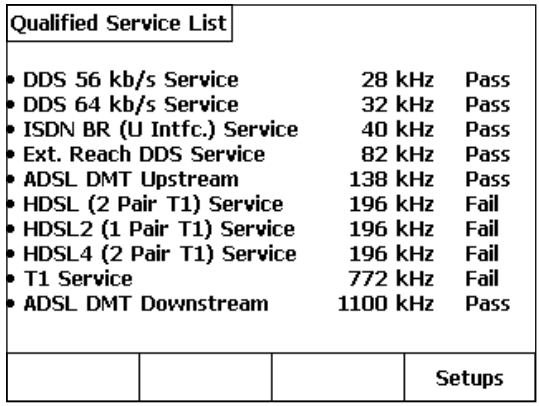

acy60s.eps

Figure 5-8. DSL Auto-Test Loss Results: Qualified Service List

Saving DSL Auto-Test Results

Auto-Test results are *not* automatically saved. To save them, do the following:

1. From the Summary Result screen, press [3](**Save Results**).
2. Enter the following Test Identification information:
   - **Job #**: Enter up to 16 alphanumeric characters.
   - **Ckt. ID**: Enter up to 16 alphanumeric characters.
   - **Cable**: Enter up to 16 alphanumeric characters.
   - **Pair**: Enter up to 16 alphanumeric characters.
   - **Side**: Select Side **1** or **2** (for 2 pair services such as HDSL4).
   - **Segment**: Select Segment **A** – **F** (for repeaters or doublers).
3. Press [2] (**Save Results**). The test results are now saved in Text Results memory, along with the qualified service Type and Test ID data.

DSL Modem Test

The DSL Modem Test is a single-ended 990 Series II test that uses an external Fluke Networks 990-GM/2 ADSL2+ or 990-GM/V VDSL "Golden Modem" appliqué to test active ADSLx lines and equipment. Refer to the 990-GM/2 Quick Reference Guide for GM/2 connection details. The following description applies to usage of the GM/2 ADSL2+ Golden Modem, but the setup and operation of the GM/V VDSL Golden Modem is generally the same.

When you connect the GM/2 to an active ADSLx pair and disconnect the CPE modem, the DSL Modem Test will control the GM/2 via the 990's serial port, and provide the following line measurements after a successful DSLAM connection:

- Up & Down Attainable Bit rates (kb/s): Maximum Bit Rate that can be achieved on the facility under test, given its transmission characteristics.
- Up & Down Actual Bit rates (Interleaved or Non-interleaved), Channel 0 and Channel 1 (kb/s): Actual Bit Rate supplied to the customer (Down) and to the DSLAM from the customer (Up).

  If the channel is not interleaved (fast channel), the displayed title is "Actual B/R". If the channel is interleaved, the displayed title is "Interleaved B/R". The "Channel 1" field is provided for future usage, where a secondary channel may be configured for a different level of impulse noise protection than the primary Channel (0).
- Up & Down Channel Capacity, Channel 0 and Channel 1 (%): Ratio of the Actual Bit Rate to the Attainable Bit Rate.
- Up & Down Noise Margins (dB): Margin of safety between the received signal level and background channel noise.
- Up & Down Transmit Power Levels (dBm): Total or aggregate power of the DSL signal being transmitted from the DSLAM (Down) and customer's modem (Up).
- Up & Down Signal Attenuation (dB): Measured difference between the signal level transmitted from one end and the level received at the other end.

- Up & Down Interleave Depth (Frames): The number of frames of interleaving implemented to reduce the effects of noise impulses.
- Up & Down Interleave Delay (ms): Transmission delay due to the interleaving process.
- Up & Down PSD (Power Spectral Density) (dBm/Hz): Average power density achieved over the DSL spectrum.
- Bits / Bin and SNR / Bin Graphs: Graphical representations of the number of data bits encoded, and the Signal-to-Noise ratio at each DMT carrier frequency.
- NE & FE Loss of Signal Indicators: “Y” (Yes) indicates an occurrence of a loss of the DSL signal at the DSLAM (FE) or customer modem (NE).
- NE & FE Loss of Frame Indicators: “Y” (Yes) indicates an occurrence of a loss of DSL framing at the DSLAM (FE) or customer modem (NE).
- NE & FE Loss of Power Indicators: “Y” (Yes) indicates an occurrence of a loss of DSL power at the DSLAM (FE) or customer modem (NE).
- NE & FE CRC & ATM HEC Error Count: Count of the number of CRC errors received at the customer modem (NE) and the DSLAM (FE), indicating the performance of the physical (DSL) layer; and a count of the number of HEC errors received, indicating the performance of the Link (ATM) layer.
- DSLAM Vendor Code: Identifies the specific DSLAM vendor.
- Network Ping Results: Results of querying or “pinging” a network IP address or URL with a multi-packet message.

Setting Up a DSL Modem Test

In this test, the GM/2 may be set up to emulate any combination of the following ADSLx modem Service Types:

- ANSI T1.413 Issue 2 (ADSL)
- ITU G.992.1a (ADSL G.DMT)
- ITU G.992.2ab (ADSL G.Lite)
- ITU G.992.3a (ADSL2)
- ITU G.992.3l (ADSL2 Reach)
- ITU G.992.5a (ADSL2+)

The 990-GM/V may be set up to emulate either the ITU G.993.1 (VDSL1) or G.993.2 (VDSL2) Service Type.

In some cases, to completely isolate a problem you need to enable only the actual CPE modem Service Type(s) supported by the connected DSLAM. In other cases, it may be necessary to enable all Service Types to determine the actual highest capacity of the line and connected DSLAM. All Service Types are enabled in the default condition.

To set up Service Types for the DSL Modem Test, do the following:

1. From the 990 **Main** menu, select the **DSL Modem Test**, then press the **Setups** softkey.
2. Highlight the desired Service Type to change, select Y to enable or N to disable, then press [ENTER].

Running a DSL Modem Test

After selecting the desired Service Type Setup options, do the following:

1. Connect the GM/2 to the line under test (using the DSL Test Cord supplied with the GM/2) and disconnect the CPE modem from the line.
2. From the 990 **Main** menu, select the **DSL Modem Test**, then press [TEST].

   The primary Modem Results screen is displayed, showing the Physical Layer modem statistics. Results fields are initially blank, and an hourglass (in the lower left corner) indicates that the test is in progress.

The Modem Status field in the upper right corner displays the real-time status of the process:

a) **Power Up**: The 990 is applying power to the GM/2 (GM/2 **POWER** LED is on, and remains on until you exit the test).

b) **Booting**: The GM/2 is booting its operating system

c) **Connecting**: The GM/2 is training with the far end DSLAM (GM/2 **SYNC** LED flashes slowly at first, then rapidly).

d) **Showtime**: The GM/2 has successfully trained with and connected to the DSLAM, and Physical Layer link statistics are available for retrieval (GM/2 **SYNC** LED is on steady).

e) **Test Completed**: Physical layer link statistics are displayed (GM/2 SYNC LED remains on steady).

The Physical Layer (primary) link statistics are available on Page 1 of the **Modem Results** screen

3. Press the **More** softkey to display the secondary Modem Results screen, which contains continuously updated error counts.

4. Press the **Bits / Bin** softkey to display the Bits / Bin graph.

Figure 5-9, 5-10, and 5-11 show the primary and secondary **Modem Results** screens, and the Bits / Bin graph for a typical test on an ADSL2+ line.

Modem Results	Modem Status Service Type	Test Completed G9925a ADSL2+
Parameter	Upstream	Downstream
Attainable B/R	1289 Kb/s	15344 Kb/s
Interleave B/R Ch. 0	1288 Kb/s	15344 Kb/s
Interleave B/R Ch. 1	n/i	n/i
Capacity Ch. 0	99%	100%
Capacity Ch. 1	n/i	n/i
Noise Margin	5.9 dB	8.0 dB
Transmit Power	11.3 dBm	14.6 dBm
Line Attenuation	12.5 dB	27.4 dB
Interleaver Depth	8 frames	64 frames
Interleaver Delay	11.25 ms	8.00 ms
PSD	-39 dBm/hz	-49 dBm/hz

More	Bits / Bin	Save Results	Setups

elf201s.eps

Figure 5-9. DSL Modem Test Primary Results Screen: ADSL+ Line

Modem Results	Modem Status Service Type	Test Completed G9925a ADSL2+
Parameter	**Near End**	**Far End**
Loss of Signal	no	no
Loss of Frame	no	no
Loss of Power	no	no
CRC Errors	0	0
ATM HEC Errors	0	0
DSLAM Vendor	BDCM	

Ping	SNR / Bin	Reset Errors	Connect Bridged

elf202s.bmp

Figure 5-10. DSL Modem Test Secondary Results Screen: ADSL2+ Line

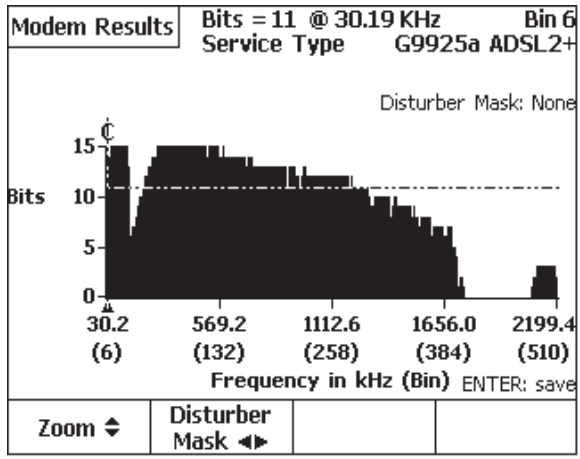

elf200s.eps

Figure 5-11. DSL Modem Test Bits/Bin Graph: ADSL2+ Line

Ping

The Ping subtest of the DSL Modem Test requires dedicated primary and secondary Setup screens for entering network configuration information.

Setting Up and Running a Ping

After a successful DSLAM connection, do the following:

1. Press the **Ping** softkey on the secondary **Modem Results** screen to display the **Ping Status** screen.
2. Press the **Setups** softkey.
3. Enter the required network configuration information (see "Ping Setup Details"), depending on the ADSLx service configuration of the subscriber's line, then press [BACK].
4. Press [TEST START STOP] to perform the network Ping operation.

   Ping results are displayed. Figure 5-12 shows the results of a **Ping** operation on a typical ADSL2+ line.

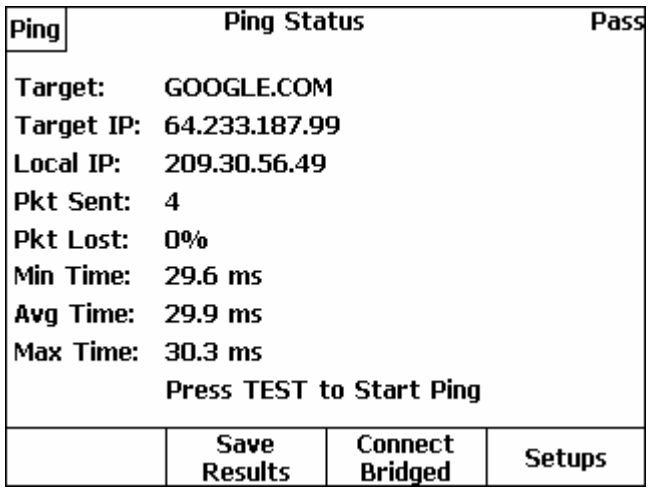

elf203s.bmp

Figure 5-12. DDSL Modem Test Ping Results: ADSL2+ Line

If the Ping operation is unsuccessful (more than 0% packets Lost), the Ping Status screen display **Fail**. If the GM/2 loses its connection with the DSLAM during the Ping operation, an error message is briefly displayed, and the Ping Status screen displays **Comm Err**.

Table 5-2 lists Ping results and descriptions.

Table 5-2. Ping Results

Result	Description
Target	Displays the URL or IP address of the selected Ping Target.
Target IP	Displays the IP address of the selected Target.
Local IP	Displays the IP address used by the 990DSL II for the Ping operation. For PPPoE, PPPoA, and DHCP connection types, this address is assigned by a DNS server. For a Static IP connection type, this address is the Static IP address entered on the secondary Ping Setup screen (see “Ping Setup Details”).
Pkt Sent	Displays the number of packets sent, selected in the primary Ping Setups screen.
Pkt Lost	Displays the percentage of packets lost (not received by the Target) during the Ping operation.
Min Time	Displays the minimum time required for the Target to receive a sent packet.
Avg. Time	Displays the average time for the Target to receive a packet.
Max Time	Displays the maximum time required for the Target to receive a sent packet.

Ping Setup Details

After you press the **Setups** softkey on the **Ping Status** screen, the screen shown in Figure 5-13 is displayed.

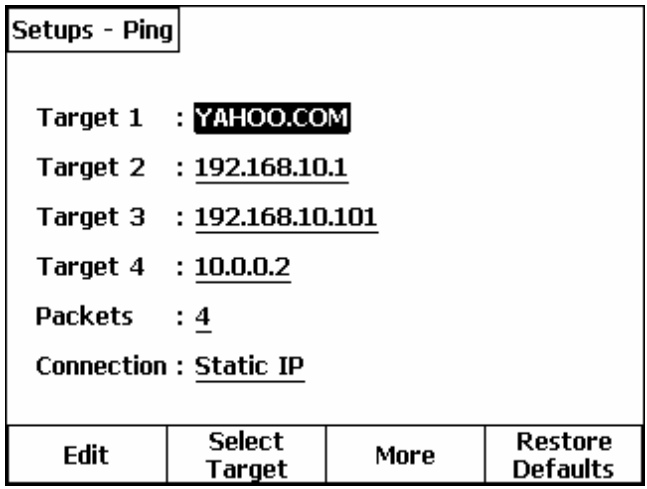

elf204s.bmp

Figure 5-13. Primary Ping Setups Screen

Do the following:

1. Enter the desired target(s) for the Ping operation.

   The 990DSL II can remember up to four Ping targets, in either IP address or URL name format.

2. Highlight the desired target and press the **Select Target** softkey.

   A message confirming your target selection is displayed.

3. If the selection is correct, press the **Okay** softkey to return to the primary **Ping Setups** screen.

4. During the Ping test, a selectable number of data packets is sent to the target address, with a default of 4 packets. To send a different number, highlight the **Packets** field and edit it to display the desired number (1 to 30).

5. Highlight the **Connection** field. Then, using the **Edit** function, scroll to and select the desired connection type for the line under test:
   - **PPPoE**
   - **PPPoE / Static IP**
   - **Static IP**
   - **DHCP**
   - **PPPoA**
6. Press the **More** softkey to display the secondary **Ping Setups** screen. Using the **Edit** function, complete the required setups for the selected connection type (see Table 5-3 for descriptions of setup parameters).
7. After entering all of the required secondary **Ping Setups**, press the **BACK** key to return to the **Ping Status** screen.
8. Press **TEST** to perform the network Ping operation.

Figure 5-12 shows the results of a Ping operation on a typical ADSL2+ line.

Table 5-3. Ping Connection Type Setups

Connection Type	Setup Parameters
PPPoE	**User ID**: Enter a valid User ID for the line under test. **Password**: Enter a valid password associated with the above User ID. **VPI**: Enter the VPI (default = 0, commonly used), which may vary according to the standards developed for a particular carrier's network. **VCI**: Enter the VCI (default = 35, commonly used), which may vary according to the standards developed for a particular carrier's network. **ATM Enc**.: Select either **LLC/SNAP** (default, commonly used) or **VCMUX** (utilized by some ATM networks) for the ATM Encapsulation field.
PPPoE/Static IP	**Note**: This connection type is provided for users (usually businesses) who have requested a Static IP address, and the service is provided with PPPoE. **User ID**: Enter a valid User ID for the line under test. **Password**: Enter a valid password associated with the above User ID. **Static IP**: Enter the static IP address that has been assigned to the customer. **Subnet Mask**: Enter the subnet mask address associated with the above static IP address. **Gateway**: Enter the gateway address associated with the above static IP address and line under test. **DNS Server 1**: Enter the DNS Server 1 address associated with the above static IP address. **DNS Server 2**: Enter the DNS Server 2 address associated with the above static IP address.

Table 5-3. Ping Connection Type Setups (continued)

Connection Type	Setup Parameters
PPPoE/Static IP	**VPI**: Enter the VPI (default = 0, commonly used), which may vary according to the standards developed for a particular carrier's network. **VCI**: Enter the VCI (default = 35, commonly used), which may vary according to the standards developed for a particular carrier's network. **ATM Enc**.: Select either **LLC/SNAP** (default, commonly used) or **VCMUX** (utilized by some ATM networks) for the ATM Encapsulation field.
Static IP	**Static IP**: Enter the static IP address that has been assigned to the customer. **Subnet Mask**: Enter the subnet mask address associated with the above static IP address and line under test. **Gateway**: Enter the gateway address associated with the above static IP address. **DNS Server 1**: Enter the DNS Server 1 address associated with the above static IP address. **DNS Server 2**: Enter the DNS Server 2 address associated with the above static IP address. **VPI**: Enter the VPI (default = **0**, commonly used), which may vary according to the standards developed for a particular carrier's network. **VCI**: Enter the VCI (default = **35**, commonly used), which may vary according to the standards developed for a particular carrier's network. **ATM Enc.**: Select either **LLC / SNAP** (default, commonly used) or **VCMUX** (utilized by some ATM networks) for the ATM Encapsulation field.

Table 5-3. Ping Connection Type Setups (continued)

Connection Type	Setup Parameters
DHCP	**MAC Spoofing**: Default = **N**, commonly used). If the network connection requires MAC verification of the user, change this selection to **Y**. **MAC Address**: (Default = blank, for MAC Spoofing = **N**). If MAC Spoofing is enabled, enter the associated user MAC address. **VPI**: Enter the VPI (default = **0**, commonly used), which may vary according to the standards developed for a particular carrier's network. **VCI**: Enter the VCI (default = **35**, commonly used), which may vary according to the standards developed for a particular carrier's network. **ATM Enc.**: Select either **LLC / SNAP** (default, commonly used) or **VCMUX** (utilized by some ATM networks) for the ATM Encapsulation field.
PPPoA	Setup parameters are the same as those listed for PPPoE (above)

The XDSL Toolbox

The XDSL toolbox (shown in Figure 5-14) is like the POTS Toolbox in that it contains both parametric and transmission tests. The parametric tests are exactly the same as in the POTS Toolbox, and are available for ease of use.

- Voltage
- Shorts & Grounds
- Opens
- RFL
- Load Coils
- Leakage Stress
- Loop Devices
- Tracing Tone

The transmission tests, however, are designed to test pairs for wideband (WB) and broadband (BB) transmission characteristics rather than voiceband. The following transmission tests are described in detail in this chapter:

- WB Noise / Level
- WB Loss
- WB Long. Balance
- Send WB Tone
- ADSL Verify Test
- Terminated WB Auto-Tests
- Impulse Noise

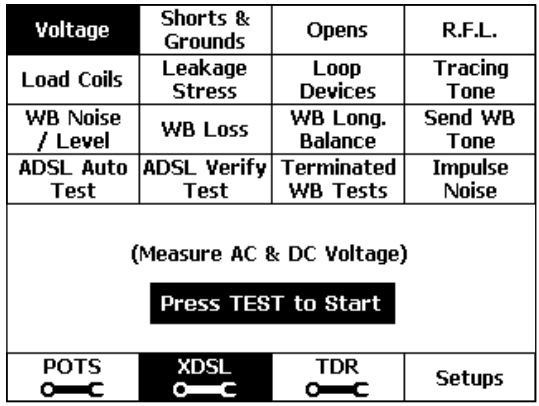

acy61s.eps

Figure 5-14. XDSL Toolbox

Starting and Stopping a Test in the XDSL Toolbox

Unless otherwise noted in the section for a particular test, use one of the following procedures to run a test in the XDSL toolbox:

- From the **Main** menu, press [2] (**XDSL**). Select the test you want to run, then press [TEST].

  OR

- From the setup menu for a particular XDSL test, press [TEST].

To stop a running test, press [BACK] or [TEST].

WB Noise/Level Test

The WB Noise / Level test measures metallic noise or signal level present on a pair. The test provides a snapshot WB or BB measurement on either spare pairs (in Terminated mode) or on active pairs (in Bridged mode).

The test employs DSP techniques to perform measurements at multiple frequencies at the same time. Depending on the choices you make in the test Setups, the tester takes measurements with either the higher resolution Nyquist frequency set (**Fine**, up to 1.2 MHz) at 508 Hz spacing, or with the DMT frequency set (Coarse, up to 18 MHz) at 4.3 kHz spacing.

Setting Up a WB Noise/Level Test

To set up a WB Noise / Level test, select the test on the XDSL Toolbox and press 4 (**Setups**). Refer to Table 5-4 for Setup parameters for the test.

Table 5-4. WB Noise/Level Test Setup Parameters

Parameter	Setting (default in bold)
Target Service Type	**ADSL/2 (1.1 MHz)**, HDSLx (1.1 MHz), ADSL2+ (2.2 MHz), VDSL (12 MHz), VDSL (18MHz)
Termination Mode	**Terminated** or Bridged
Measurement Filter	**G (ADSL)** , 1.3 MHz, E (ISDN BR), F (HDSL) {20 MHz Filter used for VDSL service}
Measurement Mode	**Coarse** (DMT) or Fine (HDSL only)
Noise Pass Threshold	≤ **-50** dBm (Range = 0 to -99)
WB Weighted Noise Pass Threshold	≤ **55** dBrn (Range = 0 to 99) {Not used on ADSL2+ & VDSL Service Types}
ADSLx Modem Filter	**N** (Disabled) or Y (Enabled)

WB Noise/Level Test Results for a Spare Pair

To run a WB Noise / Level test on a spare pair, select **WB Noise / Level** from the XDSL Toolbox, and then press [TEST].

The graph in Figure 5-15 shows the results of a WB Noise / Level test with an ADSL/2 Target Service Type that was run on a spare pair having crosstalk from an adjacent ISDN Basic Rate circuit.

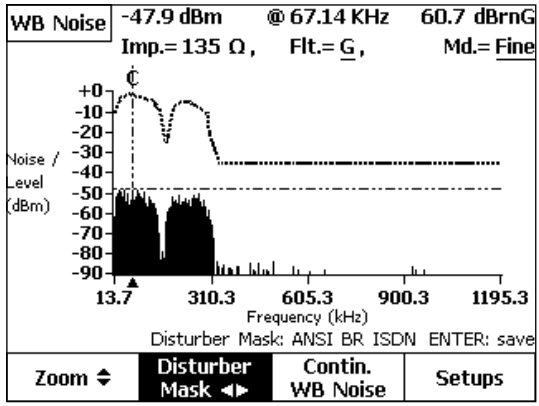

acy62s.eps

Figure 5-15. WB Noise/Level Test Results: ISDN Crosstalk

The noise level and frequency at the cursor position are displayed at the top of the screen (**-47.9 dBm @ 67.14 kHz**). The aggregate "Weighted Noise" across the filter band is shown in the upper right corner of the screen (**60.7 dBrnG**).

To zoom in or out horizontally, press [1] (**Zoom**), then press ⊕ to zoom in or ⊕ to zoom out.

You can select any of several Disturber Masks to overlay the noise graph, shown as dotted lines above the noise waveform. By comparing the disturber mask and the noise waveform, you can more easily identify the type of crosstalk interference. If the shape of a particular mask matches that of the noise waveform, the disturber is the same type as the mask label (as in Figure 5-10, where the noise pattern exactly matches the ISDN BR crosstalk pattern).

To select a mask to overlay, press [2](**Disturber Mask**). Then, repeatedly press ⊖ or ⊕ until a matching mask is displayed.

To view a continuous noise measurement *at a selected frequency*, move the cursor to the desired frequency, and press [3](**Contin. WB Noise**). The signal level at the selected frequency is continuously displayed in large numerals, along with a peak-detecting bar graph.

To save the displayed waveform in the Frequency Graph memory, press [ENTER].

WB Noise/Level Test Results for a Working ADSL Pair

Figure 5-16 shows results from a WB Noise / Level test on an active ADSL line, in the **Bridged** termination mode, with ADSL/2 Target Service Type.

Results obtained from running a bridged WB Noise / Level test on a working ADSL circuit can help you determine why the circuit is not performing “up to speed”, when other line characteristics indicate that it should be. This non-intrusive test can often be used to diagnose excessive bridged tap, interference from other data circuits or AM radio signals, or defective modems as the cause of a performance problem.

The [1](**Zoom**) and [2](**Disturber Mask**) keys operate as described earlier.

To continuously monitor any one of the DMT bin signals, move the cursor to the desired frequency, then press [3](**Contin. WB Level**). Instantaneous variations in frequency bins can be caused by impulse noise. If such variations are observed, you can measure them by running an Impulse Noise test (see “Impulse Noise Test” for details).

To run a WB Noise / Level Test on an ADSLx line having a connected ADSLx modem, select **ADSLx Modem Filter = Y** in the **Setups** menu, disconnect the DSLAM, and then run the test. The measurement will then automatically avoid the time intervals during the modem’s training tones, resulting in a clean measurement of only the quiescent background noise.

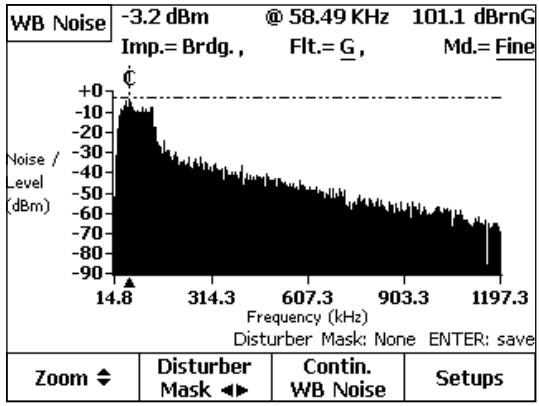

acy63s.eps

Figure 5-16. WB Noise/Level Test Results: Working ADSL Line

Figure 5-17 shows the results of a WB Noise / Level test (VDSL Target Service Type) run on a spare pair having crosstalk from an adjacent VDSL circuit.

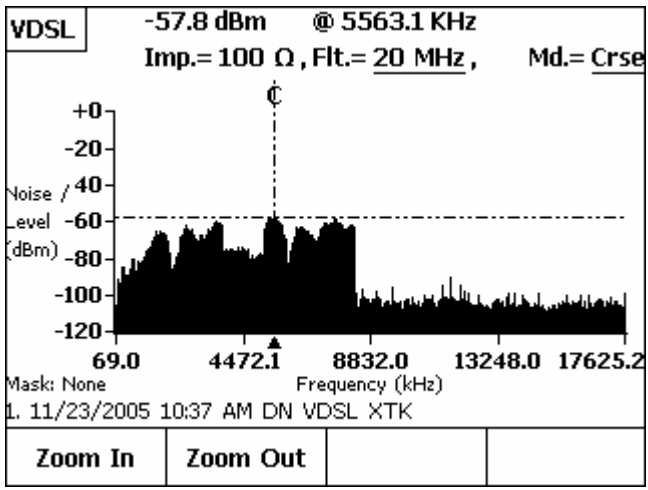

elf60s.bmp

Figure 5-17. WB Noise/Level Test Results: VDSL Crosstalk

WB Loss Test

The WB Loss test measures the level and frequency of a transmitted single frequency in the 10 kHz to 1.2 MHz spectrum for the ADSL/2 band, and the BB Loss Test from 25 kHz to 18 MHz for the ADSL2+ and VDSL bands. The test requires a generic transmitter at the far end of the pair such as a CopperPro Series II or Terminator II tester. The far-end device must be instructed to transmit the desired single frequency at a level of 0 dBm, at an impedance of 100 or 135 Ohms.

Note

For measurement accuracy, the sending device's frequency should be as close as possible to an integral multiple of 4.3125 kHz. If the sending device is a CopperPro tester or Terminator, it automatically rounds off the entered frequency to the nearest bin frequency to ensure accurate results. Unlike the DSL Auto-Test, the WB Loss test is manually controlled. There is no communication between the sending and receiving units.

Setting Up a WB Loss Test

Select the Target Service Type (ADSL/2, HDSLx, ADSL2+, VDSL (12 MHz) or VDSL (18 MHz) in the setups menu (Table 5-5). The measurement Termination Impedance will automatically be set to 100 or 135 Ohms, depending on the Target Service Type selected.

Table 5-5. WB Loss Test Setup Parameters

Parameter	Setting (default in bold)
Target Service Type	**ADSL/2 (1.1 MHz)**, HDSLx (1.1 MHz), ADSL2+ (2.2 MHz), VDSL (12 MHz), VDSL (18 MHz)
Termination Impedance	**100**Ω or 135Ω

Running a WB Loss Test

To run a WB Loss test, do the following:

1. From the XDSL toolbox, select **WB Loss** and press [ENTER].

   The **WB Loss** connection diagram is displayed.

2. Connect the CopperPro tester and the Sending Unit as shown, and then press [TEST].

   For the ADSL/2 range selection, the CopperPro tester measures all signals in the 10 kHz to 1200 kHz spectrum and positions the cursor on the largest signal as shown in Figure 5-17.

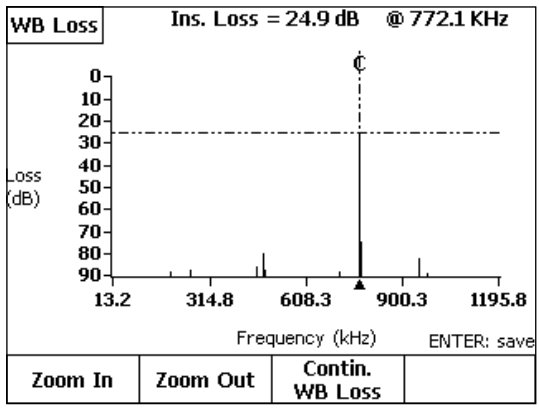

acy64s.eps

Figure 5-18. WB Loss Test Results Screen

   In the above test, the transmitted signal was 772 kHz (theT1 Nyquist frequency) to qualify the test pair for T1 service. The result at the top of the screen indicates the pair's insertion loss at the displayed frequency.

3. Press [1] (**Zoom In**) once or twice to expand the horizontal scale for easier viewing of adjacent frequency components, and [2] (**Zoom Out**) to compress the scale back again.

4. Press [3] (**Contin. WB Loss**) to monitor the signal at the selected frequency in real-time.

5. Press [ENTER] to save the waveform in the Frequency Graph storage memory.

WB Longitudinal Balance Test

The WB Longitudinal Balance test measures the metallic (T-R) effect of applying a common-mode disturbing signal (single-tone or multi-tone set) on the pair. This effect is directly related to the pair's balance to Ground. The CopperPro tester applies the common-mode tone(s) and measures the metallic tone at the near end, thus not requiring a far-end termination device.

Setting Up a WB Longitudinal Balance Test

To set up a WB Longitudinal Balance test, select the test on the XDSL Toolbox, and then press [4](**Setups**). Refer to Table 5-6 for setups. Termination Impedance and Filters are automatically selected based on choice of Tone Type and Frequency (< 1.2 MHz: 135 Ohms, 1.3 MHz Filter; >1.2 MHz: 100 Ohms, 20 MHz Filter). This test is restricted to the Pair 1 shielded test lead set, which provides the measurement balance required for the broadband frequency range (up to 18 MHz).

Table 5-6. Longitudinal Balance Test Setup Parameters

Parameter	Setting (default in bold)
Disturbing Tone Type	**Multi**, Single (Multi = 0.25 MHz to 17.5 MHz)
Disturbing Single Tone	**25.000** kHz (Range = 25 kHz to 17664 kHz)
Long. Balance Pass Threshold	**30** dB (Range = 0 to 100 dB)

Running a WB Longitudinal Balance Test

To run a WB Longitudinal Balance test, select **WB Long. Balance** from the XDSL Toolbox and then press [TEST].

WB Longitudinal Balance Test Results

Test results for a pair with a severe capacitive unbalance (such as having a one-sided bridged tap) are displayed in Figure 5-19. Failing values are highlighted in flashing reverse-video format. This test was run with the Multi-tone set to qualify the pair for VDSL service.

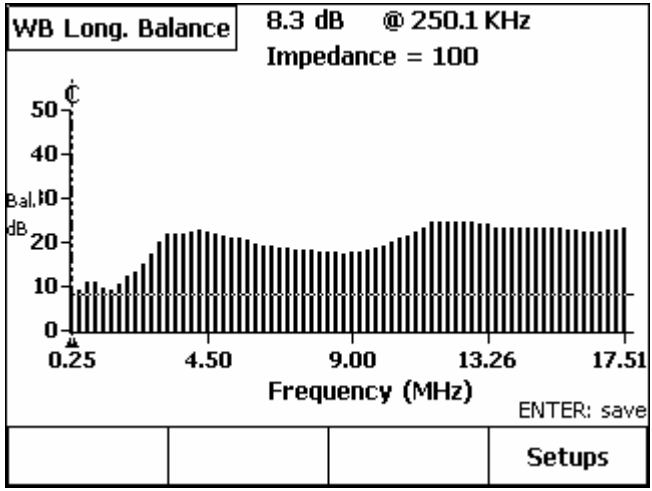

elf61s.bmp

Figure 5-19. WB Longitudinal Balance Test Results

Send WB Tone Function

The Send WB Tone test continuously transmits a single precision WB or BB tone at a level of 0 dBm, with a transmit impedance of 100 or 135 Ohms.

Setting Up a Send WB Tone Test

To set up the Send WB Tone test, follow the instructions under “Displaying a Setup Menu” in Chapter 3. Refer to Table 5-7 for setup parameters.

Table 5-7. Send WB Tone Test Setup Parameter

Parameter	Setting (default in bold)
Transmit Impedance	**100 Ω** or 135 Ω

Running a Send WB Tone Test

To Send a WB or BB Tone, do the following:

1. From the XDSL toolbox, select **Send WB Tone** and press [ENTER].

   The **Send WB Tone** screen is displayed.

2. Press [,](**Enter Send Frequency**). Enter the desired frequency (between 10 kHz and 17.66 MHz) and then press [ENTER]. For tones above 1.2 MHz, the 100 Ohm Transmit Impedance is automatically used.

3. Press [TEST START STOP].

   The tester begins sending the specified tone.

4. To stop sending the tone, press [BACK] or [TEST START STOP].

ADSL Verify Test

The ADSL Verify Test is a rapid single-ended test of an active ADSL line to determine the presence of both the C.O. DSLAM and customer modem, and to determine the approximate bit-rate capability of the line. It is comprised of a test looking toward the C.O. DSLAM (**ATU-C Test**) with the customer modem disconnected, and a test looking toward the customer modem (**ATU-R Test**) with the DSLAM disconnected.

This test may either be performed at installation of the DSLAM or modem to verify service turn-up, or as a diagnostic tool to help pinpoint the root problem during ADSL trouble calls on existing services.

The ATU-C test should be run at the customer's location in order to get meaningful bit-rate information over the entire loop. The ATU-R test can be performed at either the DSLAM or customer's location, as it is used only to verify operation of the modem and not to obtain bit-rate information.

Setting up an ADSL Verify Test

There are no setups required for this test. The test is not modem-vendor specific and works equally well on all network equipment conforming to ANSI TI.413, ITU G.992.1 or G.992.2.

Running an ADSL Verify Test

From the **Main** menu (Figure 3-2), select **ADSL Verify Test** and then press [ENTER].

The ATU-C Test / ATU-R Test option screen is displayed.

ATU-C Test

To test the line and DSLAM for performance, do the following:

1. At the customer's location, disconnect the outside line from the ADSL modem.
2. Connect the tester pair 1 test leads to the Tip, Ring, and Ground terminals of the outside line.
3. Press [1](**ATU-C Test**), then press [TEST].

ATU-C Test Results

At the completion of the ATU-C DSLAM test, one of three basic screens is displayed:

- **Data Activity Detected**

  This result indicates that the modem is still connected to the line, and needs to be disconnected; or that the modem has just been disconnected, and you should wait about a minute before repeating the test.

- **DSLAM Detected**

  After successful training with the DSLAM, the tester displays predicted Downstream and Upstream bit-rate ranges and the measured signal loss at the training frequency.

  Downstream Bit-rate Ranges:

  HIGH = 4 to 8 Mb/s

  MED = 2 to 4 Mb/s

  LOW = 1 to 2 Mb/s

  Upstream Bit-rate Ranges:

  HIGH = 0.5 to 1 Mb/s

  LOW = 0.1 to 0.5 Mb/s

- **DSLAM Not Detected**

  This indicates that the DSLAM has not yet been connected at the frame, the DSLAM modem is not operational, or the outside line will not support ADSL operation. This could be due to the presence of one or more load coils; excessive loop length, bridged tap length or background noise; poor splice joint; resistance fault; or interference from adjacent digital circuits or AM radio signals.

ATU-R Test

To test for the presence of a customer's ADSL modem, do the following:

1. Connect the tester pair 1 leads to the modem "Line" jack, or to the outside line, with the DSLAM disconnected.
2. Press [2] (**ATU-R Test**), then press [TEST START STOP].

ATU-R Test Results

At the completion of the ATU-R test, one of three screens similar to the ATU-C screens (listed above) is displayed. The “ADSL Modem Detected” screen gives the signal loss at the modem training frequency but does not give predicted data rates as in the ATU-C test.

Terminated WB Tests

Terminated WB Tests are similar to the Terminated VF Tests described in Chapter 4, but employ wideband and broadband tests rather than voiceband tests to qualify pairs for high-speed digital services.

These tests require a far-end terminating device such as the Fluke Networks Terminator or Terminator II (or another CopperPro tester running in the “Terminator Emulator” mode), or 3M FED™ or FEDII™, or CMC My Helper™. As in the VF tests, the CopperPro tester automatically controls the listed far-end devices over the test pair. All of the far-end devices mentioned support wideband testing (10 kHz to 1.2 MHz), but *only* the Terminator II (or CopperPro Series II tester in the “TE” mode) supports full broadband testing (up to 18 MHz).

Setting Up a Terminated WB Test

Refer to “Setting Up a DSL Auto-Test” earlier in this chapter, as the setup procedure for the Terminator and FED™ WB Auto-Tests is the same as previously described.

Running a Terminated WB Test

To run a Terminated WB test, do the following:

1. From the XDSL Toolbox, select **Terminated WB Tests** and press [ENTER].

   The **Select Terminated WB Test Type** screen is displayed, with the following selections available:

   - [1] (**Terminator WB Auto-Test**) – This function is exactly the same as the DSL Auto-Test described earlier in the chapter. It appears as well in this test group for convenience. It employs a Fluke Networks Terminator or Terminator II (or another CopperPro I or II tester in the "TE" mode) as the far-end device.
   - [3] (**FED WB Auto-Test**) – This function is similar to the Terminator WB Auto-Test, but employs either a FED™ or FEDII™ as the far-end device. The CMC My Helper™ operates the same as the FED™ units.

   Note

   All the above Auto-Tests are similar in operation. However, only the Terminator and Terminator II are capable of sending composite, wideband tone-sets. As a result, the Terminator WB Auto-Test is much faster, and yields more comprehensive test results.

2. The **WB Auto-Test** connection diagram for the corresponding far-end device is displayed.

3. Connect the units as shown in the displayed connection diagram, select the desired test option (**Pair 1 Test** or **Pair 2 Test**), and press [TEST].

   The CopperPro Series II tester supports wideband testing (to 1.2 MHz) on *both* Pair 1 and Pair 2 test leads; but supports broadband testing (to 18 MHz) on *only* the shielded Pair 1 test leads.

   The tester displays on-screen the test it is currently running. When completed, a Summary Results screen is displayed similar to that shown in Figure 5-3 under "DSL Auto-Test Results".

4. Refer to procedures described earlier in the DSL Auto-Test section to view detailed results.

Saving Terminated WB Test Results

Refer to the procedure in “Saving DSL Auto-Test Results” for saving Terminated WB Test results.

Impulse Noise Test

The Impulse Noise test is a single-ended test that enables wideband or broadband noise transients of specified amplitude to be counted and recorded over a user-specified time. The results of this test can be particularly helpful for tracking intermittent noise problems. Used in conjunction with the WB Noise / Level test, the Impulse Noise test can help you pinpoint sources of external noise.

Setting Up an Impulse Noise Test

To set up an Impulse Noise test, select the test on the XDSL Toolbox and press 4 (**Setups**). Refer to Table 5-8 for setup parameters.

Table 5-8. Impulse Noise Test Setup Parameters

Parameter	Setting (default in bold)
Termination Mode	**Terminated** or Bridged
Termination Impedance	**100** Ω or 135 Ω
Measurement Filter	**G (ADSL)**, 20 MHz (ADSL2+, VDSL), 1.3 MHz, E (ISDN BR), F (HDSLx)
Test Time Setting	**15** minutes (Range = 1 to 1440 minutes)
Counter Threshold	> **-40** dBm (Range = 0 to -50 dBm)
Pass Threshold	< **10** counts (Range = 0 to 999 counts)

Running an Impulse Noise Test

To run an Impulse Noise test, do the following:

1. From the XDSL toolbox, select **Impulse Noise** and press [ENTER].
2. Press [TEST] to start the test.

   The tester begins counting noise transients that exceed the **Counter Threshold** level in Setups.

   The test automatically stops when the displayed **Elapsed Time** value reaches the **Test Time Setting** entered in Setups. The displayed **Impulse Count** value is highlighted in flashing, reverse-video when it exceeds the **Pass Threshold** entered in Setups.

Impulse Noise Test Results

Figure 5-20 shows an example of a **WB Impulse Noise** test results screen.

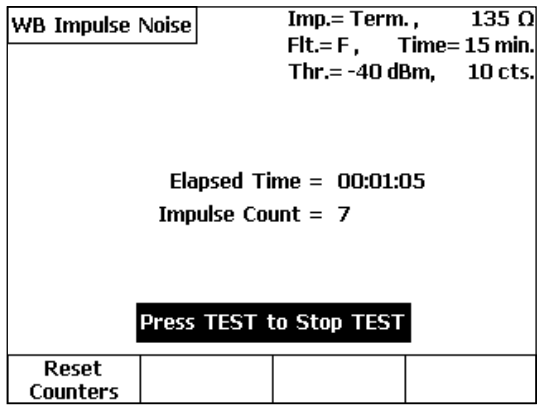

acy105s.eps

Figure 5-20. WB Impulse Noise Test Results

3. To reset the **Elapsed Time** or **Impulse Count** at any time during the test, press [1](**Reset Counters**).
4. To change the setup for the test, press [TEST] to stop the test. Then, press [4](**Setups**). After you make setup changes, press [TEST] to re-start the test.

Chapter 6
TDR Testing and Fault Location

Introduction

This chapter describes the CopperPro's TDR (Time Domain Reflectometer) test. The TDR testing function can often help you locate loop faults with greater precision than the parametric fault location tests that are described Chapter 4. With TDR, not only can you confirm the results of the basic parametric tests, but when you use TDR in conjunction with those tests, you can also vastly improve your ability to accurately measure the distance to faults in a cable.

The TDR Auto-Test function combines both frequency domain (parametric) and time domain (TDR) testing functions in the same package. This combination not only provides a rapid learning curve (due to the consistent user interface), but also gives you with a truly powerful—yet cost-effective—testing solution.

Comparing Parametric Tests to the TDR Test

Table 6-1 provides an overall assessment of the accuracy of the TDR test and three parametric tests (Opens, Load Coils, and RFL) at locating six common cable faults. The table highlights both the versatility of the TDR test as well as the complementary nature of all of the tests and their relative strengths and weaknesses. You may want to refer to this table when trying to decide which tests to use in a particular situation.

Table 6-1. TDR vs. Parametric Fault Location Tests

Type of Cable Fault	CopperPro Tests			
	TDR	Opens	Load Coils	RFL
Open Conductor	Excellent	Excellent	–	–
Partial Open (Bad Splice)	Excellent	Poor	–	–
Split Pair	Excellent	Fair	–	–
Bridged Tap	Excellent	–	–	–
Undesirable Load Coils	Distance: Excellent Count : -	–	Distance: Fair Count : Good	–
Resistive Fault	Excellent (R_f < 1 kΩ)	–	–	Excellent (any R_f)

What Happens During a TDR Test: An Overview

You can use the TDR test to determine the length of a cable and to precisely locate faults along the cable. When making a TDR measurement, the CopperPro applies a balanced, high-frequency drive pulse to the test pair. Any fault in the cable causes some of this pulse to reflect back to the CopperPro. The tester captures these reflections (also called echoes), which can be caused by the faults described later (see "Reflections"). The CopperPro measures the amount of time it takes for the pulse it transmitted to return, then uses that time to calculate the distance to the source of the reflection (the fault).

The elapsed time between the transmission of a pulse and its reflection is measured by a highly accurate clock source. Based on the velocity of propagation (VOP) of the pulse, the CopperPro converts the time to distance. The type of cable you are testing determines the VOP, which is defined as the ratio of the speed of the pulse in the cable to the speed of light. For example, a cable with a VOP of 0.64 transmits a pulse at 64% of the speed of light.

Length Measurements and VOP

To obtain accurate length measurements, you must choose the right cable type or supply the correct VOP of the cable that you are testing. The more accurate the VOP, the more accurate the CopperPro's measurement of the distance to the source of the reflection (the fault). The CopperPro stores VOP values for standard cable types in its memory. Be aware that actual VOP values can vary (see "Determining the VOP" later in this chapter). Therefore, if accurate length measurements are critical to your testing process, you should specify *actual* VOP values when you set up the test. Most cable manufacturers supply VOP information in their specifications.

Reflections

Reflections are caused by discontinuities in a cable's characteristic impedance, such as gauge changes, splices, faults, the cable's end, or series network elements. Positive (in-phase) reflections result from sudden increases in cable impedance, such as those due to opens, load coils, or resistive splices. Negative (out-of-phase) reflections result from decreases in cable impedance, such as those due to resistive faults (for example, shorts, grounds, and crosses), bridged taps, and build-out capacitors. A cable that has no faults or network elements and is properly terminated in its characteristic impedance generates no reflections.

TDR Auto-Test

The TDR Auto-Test is an automatic test. With the press of a single key, this Auto-Test runs a sequence of parametric tests and a TDR test. Results from a TDR Auto-Test can give you a quick— yet comprehensive— view of the status of a pair. For the novice or infrequent operator of TDR equipment, the TDR Auto-Test can provide a good starting point in the troubleshooting process.

The TDR Auto-Test automatically flags and pinpoints the location of the following types of faults:

- Open conductors
- Resistance shorts
- Load coils
- Bridged taps
- Bad splice joints
- Terminations

Even though the individual TDR tests (described later in this chapter) can be performed on working pairs with voltage, the TDR Auto-Test should be run on non-working pairs only. This is because several of its integrated parametric tests (for example, Opens and Shorts & Grounds) are accurate only when there are moderate amounts of voltage on the line.

Setting Up a TDR Auto-Test

To set up a TDR Auto-Test, complete the following:

1. From the **Main** menu, select **TDR Auto-Test**. Then, press 4 (**Setups**).
2. Select the appropriate **Cable Type** and **Gauge** (refer to Table 6-2).

   Note

   Before you run this test, you must select the proper Cable Type and Gauge. If these parameters are specified, the CopperPro will use the industry-standard VOP for that cable type and gauge. If the actual VOP is known, however, you can supply it as well.

3. Select the desired **Pulse Width** (Range) to use for the test. Use **Auto** (default) to auto-range and find the largest reflection, regardless of range. If interested in reflections within a particular range of the cable, select the pulse width corresponding to the desired range.
4. Select the **Cable Makeup** option, using **Single Gauge** when the pair is *predominantly* one gauge; otherwise, use **Multi-Gauge / Uncertain**.

   Note

   *The **Single Gauge** option yields the most accurate reflection analysis.*

5. Enable the **Filter** option when a high level of power influence is present.
6. Enable the **Average** option to smooth out instantaneous noise bursts.
7. If less sensitivity to reflections is desired, enter a lower value for **Fault Detect Sensitivity.** If more sensitivity is needed, increase this % value.
8. Set up the individual parametric tests (Voltage, Load Coils, Opens, and Shorts & Grounds). To do this, display the Setup screen for each test and enter the desired options (see Chapter 4 for Setup instructions for each test).
9. If an active ADSLx modem is on the line (but not the DSLAM), enable the **ADSLx Modem Filter**.

   Note

   This forces the TDR to operate only during the modem silent intervals, resulting in interference-free operation.

Table 6-2. TDR Auto-Test Setup Parameters

Parameter	Setting (default in bold)
Pulse Width (Range)	**Auto**, 20 ns (500 ft), 100 ns (2000 ft), 500 ns (4000 ft), 1000 ns (6000 ft), 2500 ns (12,000 ft), 5000 ns (>12,000 ft)
Cable Gauge	19, 22, **24**, 26, 28 AWG
Cable Type	**Jelly Filled**, Air Core, Pulp, JKT, 5 Pr. Bur. Drop, 2 Pr. Bur. Drops, 1 Pr. Aer. Drop, 2 Pr. Universal, Custom
VOP	**0.589** (Range = 0.300 to 0.999)
Filter	**OFF,** ON
Average	**OFF,** ON
Fault Detect Sensitivity	**95.0 (**Range = 1.0 to 100.0 %)

Starting and Stopping a TDR Auto-Test

To run a TDR Auto-test, display the **Main** menu. Select **TDR Auto-Test**, then press [TEST].

The Auto-Test begins, running the following tests in the order listed:

- Voltage (DC & AC)
- Load Coils
- Opens
- Shorts & Grounds (if a resistive fault detected in the Opens test)
- TDR operation (using the selected Pulsewidth)

To stop the Auto-Test at any time, press [TEST].

TDR Auto-Test Results

When the TDR Auto-Test ends, the CopperPro displays the **TDR Auto-Test** result screen. Figure 6-1 shows an example of a balanced open pair.

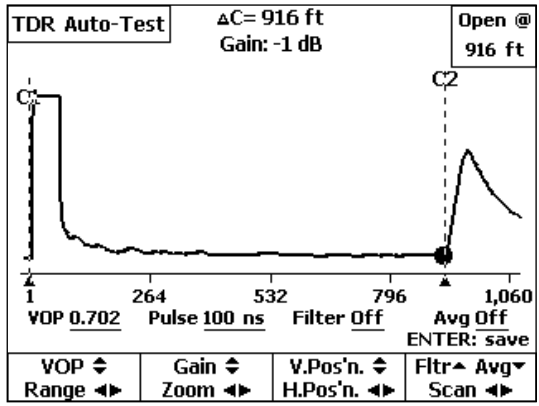

acy71s.eps

Figure 6-1. TDR Auto-Test Results: Open

Figure 6-1 is a typical TDR Auto-Test result screen. It has the following elements:

- **Pair Status Message**: shown in the upper right corner of the screen and highlighted (**Open @ 916 ft**). This is a final overall result that the CopperPro derives by interpreting results from all of the individual tests that it runs.
- **Launch Pulse**: appears as the larger, positive pulse on the left side of the screen.
- **Launch Cursor (C1)**: the vertical line that marks the start of the launch pulse. To manually move the launch cursor, press ⊕ to move right and ⊖ to move left.
- **Reflection Pulse(s)**: appear as smaller positive pulses (as seen in Figure 6-1) or negative pulses to the right of the launch pulse.
- **Reflection Cursor (C2)**: the vertical line that marks the position of the largest detected reflection. To manually move the reflection cursor, press ⊕ to move right and ⊖ to move left.

- **TDR test parameters**: shown in the top center portion and base of the screen. The symbols and abbreviations have the following meanings:
  - **ΔC**: Distance between position of launch cursor and reflection cursor.
  - **Gain**: The current amount of magnification used to display the trace.
  - **Pulse:** Launch pulse-width (in nanoseconds)
  - **Fltr**: Power filter status (in Figure 6-1, the user turned it off).
  - **Avg**: Trace smoothing filter (in Figure 6-1, the user turned it off).
  - **VOP**: Velocity of propagation factor that is specified in the setup.
- **TDR softkeys**: alternate action softkeys that activate the functions described in Table 6-3. The softkey is highlighted when the function is activated. To deactivate a function, press its softkey again.

  The TDR Auto-Test is a snapshot function. After the test ends, you can press any of the softkeys that are listed in Table 6-3 except **Range**, **Fltr**, and **Avg**. You must select the filters before you run the Auto-Test. The pulse-width is either the selected value, or automatically determined during the test if **Auto** was selected.
- **Highlighted TDR Auto-Test Result Types**: Fault types and marking tags that are automatically identified are as follows:
  - **Open, T Open, R Open** (“Full Circle”, “Upper ½”, “Lower ½”)
  - **Short** (“Star”)
  - **B. Tap** (Bridged Tap, “**T**”)
  - **L. Coil** (Load Coil, “Diamond”)
  - **Splice** (High resistance open or splice joint, “Triangle”)
  - **Split** (“**+**”)

Table 6-3. TDR Auto-Test Softkeys

Press this key first	Then press
V_{OP} Pulse ▲▼ ◀▶	The ⊕ or ⊖ key to respectively increase or decrease the current VOP value from 0.300 to 0.999. The ◀ or ▶ key to respectively decrease or increase the pulse width from 20 ns to 5000 ns.
Gain Zoom ▲▼ ◀▶	The ⊕ or ⊖ key to respectively increase or decrease the waveform vertical gain (size). The ◀ or ▶ key to respectively compress or expand the waveform horizontal scale about the reflection cursor.
V.Pos'n. H.Pos'n. ▲▼ ◀▶	The ⊕ or ⊖ key to respectively move the entire waveform up or down in the display window. The ◀ or ▶ key to respectively move the entire waveform left or right in the display window.
Fltr▲ Avg▼ Scan ◀▶	The ⊕ key to apply the Power Filter (**Fltr**). Press ⊕ again to remove the filter. The ⊖ key to apply the Averaging Filter (**Avg**). Press ⊖ again to remove the filter. The ◀ or ▶ key to respectively move Cursor 2 (C2) left or right (**Scan**) to the next detected reflection on the displayed waveform. If the next reflection is outside of the current view, the waveform automatically shifts position to bring it into view.

Note

The tester is designed to automatically find and classify reflections based on a complex set of testing algorithms. However, due to the variety of cable types and faults that may be encountered, a visual waveform interpretation may be required to resolve the actual problem. For example, the tester may not mark a reflection exactly at its start point. In this case, manually move the reflection cursor to the exact start of the reflection to get the proper distance.

Saving TDR Auto-Test Results

The TDR Auto-Test waveform is a snapshot result that you can save in a file. To save a result, press [ENTER], then follow the prompts for naming and saving the file. For details, see Chapter 7 “Saved Test Results”.

The TDR Toolbox

The TDR toolbox is shown in Figure 6-2. The tests in this toolbox enable you to perform a variety of individual measurements on a pair. These tests are described separately later in this section.

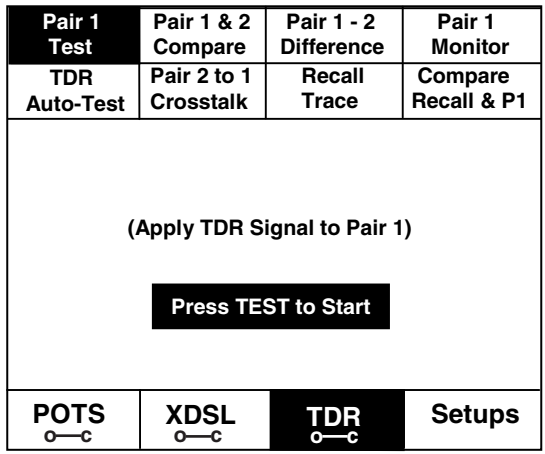

acy72s.eps

Figure 6-2. TDR Toolbox

Running a Test in the TDR Toolbox

With the exception of the TDR Auto-Test, all tests in the TDR Toolbox are continuous tests.

To run a TDR Test, do the following:

1. From the **Main** menu, press [3] (**TDR**) to display the TDR toolbox (Figure 6-2).
2. Select the test that you want to run, then press [TEST START STOP].

To stop a continuously running test, press [TEST START STOP].

Saving TDR Test Results

For continuous tests that display a constantly updated "live" trace, you can save a snapshot of the trace. To do this, press [ENTER]. Then, follow the prompts for naming the file and saving it. For details, see Chapter 7 "Saved Test Results".

Pair 1 Test

The Pair 1 test is the basic TDR "auto-ranging" test tool. In this test, a launch pulse is continuously applied to Pair 1, and the resulting reflections are continuously displayed. The resulting waveform is a single trace on the screen.

The Pair 1 test result screen is similar to that shown in Figure 6-1 except that the CopperPro does not display pair status information. The launch cursor marks the beginning of the launch pulse. The reflection cursor marks the *approximate* start of the largest reflection, and **ΔC** automatically gives the approximate distance to the reflection.

The Pair 1 test uses pre-selected VOP and filter settings. However, you can change these settings in real time after the test begins. The test automatically searches for reflections, initially changing pulse-widths and vertical and horizontal scales to present the clearest possible picture of the largest reflection.

After determining the best set of parameters for the specific type of reflections that it detects, the CopperPro displays a *continuous* image of the waveform on the screen. If you want to see the effect of a different pulse width or filter, you can do so at any time, with the continuous test automatically displaying the resulting waveform.

Note

The reflection cursor is automatically positioned as close as possible to the leading edge of the largest reflection. However, it is recommended that you manually expand the horizontal (Zoom) and vertical (Gain) scales in order to zero in on the reflection. Then move the reflection cursor until it is at the leading edge of the reflection and until it just begins to move off the horizontal baseline. The ***ΔC*** *value should now be the most accurate possible distance to the fault.*

After a waveform is displayed, you can force the unit to increase or decrease its pulse width by pressing [1] (**Range**) and then ⊖ or ⊕. To go back to the **AUTO** pulse width, press ⊕ until **AUTO** is displayed. This procedure may be used on all continuous TDR tests.

Pair 1 and 2 Compare Test

The Pair 1 and 2 Compare test enables you to see continuous TDR waveforms from Pair 1 (T and R) and Pair 2 (T1 and R1) simultaneously. This test is typically used to compare a good pair (Pair 1) with a suspected faulty pair (Pair 2) in the same count so that you can see the differences between the two more closely.

Figure 6-3 shows a typical Pair 1 and 2 Compare test result screen. The TDR softkeys operate in the same manner as those on the Pair 1 test result screen (see “Pair 1 Test” and Table 6-3 for descriptions).

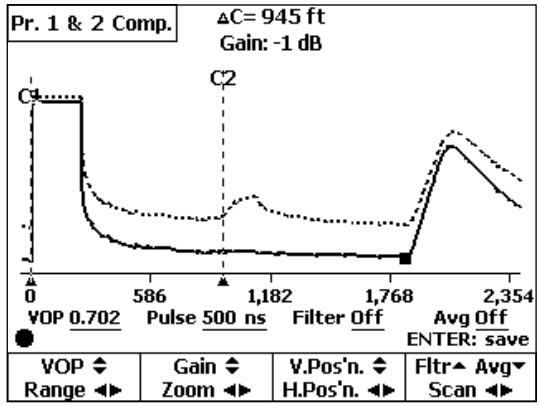

acy73s.eps

Figure 6-3. Pair 1 and 2 Compare Test Result Screen

Pair 1is *always* depicted as the lower trace and shown as a solid line. Pair 2 is the upper trace, which is shown as a dotted line. In Figure 6-3, note that the trace for Pair 2 has a minor reflection (it is marked by the reflection cursor) that indicates a gauge change at a splice point.

Pair 1 - 2 Difference Test

This test is similar to the Pair 1 and 2 Compare test. The main difference between the two tests is that in the Pair 1-2 Difference test, the CopperPro internally computes the mathematical difference between the two waveforms and displays the difference as a *single* trace. This presentation is especially helpful for helping you see minor differences between two pairs—one good and one suspect.

Pair 1 waveform data is used as the reference, and Pair 2 data is subtracted from it to obtain the “difference” waveform. If both pairs are identical (have *exactly* the same waveforms), the result is a straight line with no reflections.

The TDR softkeys operate in the same manner as those on the Pair 1 test result screen (see “Pair 1 Test” and Table 6-3 for descriptions).

Pair 1 Monitor

The Pair 1 Monitor test can help you track down intermittent faults. The test operates continuously (like the Pair 1 Test), but the CopperPro records waveform differences over time on the screen.

Figure 6-4 shows the results from a Pair 1 Monitor test that was conducted on a pair with an intermittent splice connection.

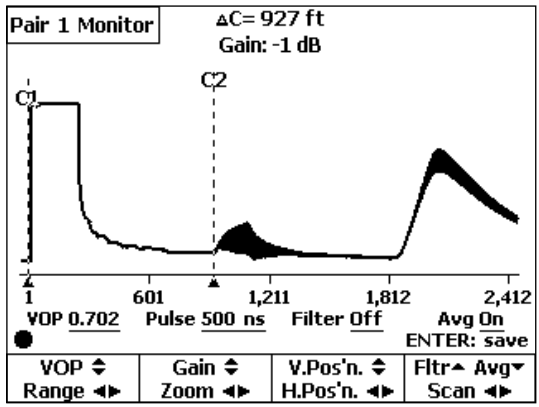

acy74s.eps

Figure 6-4. Pair 1 Monitor Test Result: Intermittent Splice

The TDR function keys operate in the same manner as they do on the Pair 1 test result screen (see “Pair 1 Test” and Table 6-3 for descriptions).

You can change the cursor positions at any time without affecting the displayed waveform. However, if you operate any of the other softkeys, you will erase the previously stored deviations and the waveform will start anew from that point.

Pair 2 to 1 Crosstalk Test

The Crosstalk test is useful for locating resistive crosses between pairs that are typically caused by the breakdown of insulation due to water in a cable. This test is also helpful for determining the location of a pair split and the location of a split repair, when both split pairs are connected.

In this test the CopperPro applies launch pulses on Pair 2, but measures any coupled reflections on Pair 1. The signal level of the resulting single trace is directly proportional to the leakage between the two pairs, and the position of the reflection occurs at the point of the leakage.

Note

The launch pulse does not appear on the Crosstalk test result screen because it is launched on Pair 2. The result screen shows only the signals occurring on Pair 1. However, any resulting influence on Pair 1 from the pulse, which may include slight coupling spikes from the Launch Pulse leading and trailing edge, is displayed.

The TDR softkeys operate in the same manner as those on the Pair 1 test result screen (see “Pair 1 Test” and Table 6-3 for descriptions).

Displaying and Deleting Saved Traces

To display or delete a saved trace, complete the following:

1. From the TDR toolbox (Figure 6-2), select **Recall Trace**.
2. Press ENTER.

   A list of stored TDR trace files is displayed.
3. Press ⊕ or ⊕ to select the trace file.
4. Do one of the following:
   - To display a file, press ENTER.

     The selected trace is displayed. Note that the waveform is static, which means that it is not continuously updated. Therefore, the real-time **Range** or **Pulse** and **Filter** softkeys are not available for use.

     You can use the cursor, **VOP**, **Gain**, **Zoom**, **Vertical**, and **Horizontal** softkeys. These keys operate in the same manner as they do on the Pair 1 test result screen (see "Pair 1 Test" and Table 6-3 for descriptions).
   - To delete a file, press **Delete** (for details, see Chapter 7, "Saved Test Results").

Compare Recall and Pair 1 Test

The Compare Recall and Pair 1 test is used to compare a previously stored trace with a "live" trace on Pair 1. The format of the results is like those shown in Figure 6-3, in which two "live" signals are displayed for comparison. In this test, Pair 1 is shown as the lower trace with a solid line, and the previously stored trace is shown as the upper trace with dotted lines.

You cannot use the real-time **Range** or **Pulse** and **Filter** softkeys on the result screen. The remaining softkeys operate in the same manner as those on the Pair 1 test result screen (see "Pair 1" and Table 6-3 for descriptions).

TDR Test Operating Tips

The operating tips in this section are provided to help you in the “real world” of TDR testing.

Determining the VOP

When you select a **Cable Type** and **Gauge** in the setup for the test, the CopperPro automatically uses a standard median VOP value. Several factors, however, can make this value erroneous and cause the tester to incorrectly determine the location of a fault:

- Multiple gauges in the cable makeup
- Cable dielectric differences between manufacturers
- Dielectric variation with temperature (1% per 10°C)
- Water in the cable
- Age of the cable.

The following procedure outlines a reliable method for calibrating the VOP factor to a particular cable type:

1. Locate a known *good* pair in the same binder group as the test pair.
2. Find the pair’s *exact* length. There are several ways to do this:
    - Run an Ohms-to-Distance test with the far end shorted and with the gauge configuration known.
    - Run an Opens test, using the proper cable type.
    - “Wheel off” the length with a measuring wheel (taking slack loops or “snaking” into account).

3. Run the TDR Pair 1 test on the known good pair.
4. Align the reflection cursor on the *exact* leading edge of the pair's positive "open" reflection.
5. Adjust the VOP until the "Delta C" (**ΔC)** distance equals the known length.
6. Use this value of VOP for testing the faulty pairs.

Double-ended Testing

To further minimize errors during TDR testing, it is advisable to test from both ends of the cable. If the sum of the "Delta C" (**ΔC**) distances to the same fault (from testing from both ends) does not equal the known section length, adjust the VOP factor and re-test from both ends. When the sum of the "Delta C" distances equals the section length, you have found the exact location of the fault.

Another method entails mathematically deriving the exact fault distance (without having to adjust VOP and re-test multiple times). However, this method requires that the exact section length be known. To obtain an exact distance, do the following:

1. Test the faulted pair from both ends and record both "Delta C" distances to the *same* fault (D1 and D2).
2. Calculate the Correlation Factor (CF) by dividing the known section length (L) by the sum of the two distances: CF = L / (D1 + D2)

3. Multiply each of the two distances by the CF to get the corrected distance (CD) to the fault from both ends:

   CD1= CF x D1 and CD2 = CF x D2

   Example: Known section length L =1200 feet

   TDR Measurement D1 = 400 feet

   TDR Measurement D2 = 600 feet

   CF = 1200 / (400 + 600) = 1.20

   CD1 = 1.2 x 400 = 480 feet

   CD2 = 1.2 x 600 = 720 feet

   Section Length = CD1 + CD2 = 1200 feet (sanity check)

Testing for Faults Close to the CopperPro

Reflections that occur before the launch pulse has been completed (due to faults that are very near the CopperPro connection) can be distorted or even completely masked by the launch pulse itself. In these cases, to get a clearer picture of the reflection, attach a *known* length of jumper wire (of the same type and gauge as in the cable, if possible) to the CopperPro test leads to compensate for the pulse's width. An extension of about 10 to 15 feet in length should cover *all* applications, using the CopperPro's shortest pulse-width.

Chapter 7
Saving Test Results

Introduction

This chapter shows you how to save test results in the CopperPro's memory. You will also learn how to view and print saved test results and how to upload them to a PC.

Saving Test Results

The CopperPro saves results in two types of files:

- Text-based files

  Text-based files consist of data that is comprised solely of alphanumeric characters and special symbols. The results of simpler tests, such as the Voltage, Shorts and Grounds, and Opens tests, are stored as text-based files.

- Graphical files

  Graphical files consist of data that is represented by a waveform (in the case of TDR) or a frequency sweep graph. The results of more complex tests, such as the TDR, Noise, Level, and Loss tests, are stored as graphical files.

Storage Limitations of Saved Result Files

The CopperPro stores text-based test results in a circular buffer, so that as additional files are saved, older files are eventually overwritten. The tester's available storage capacity differs depending on the type of test result.

Graphical results require much more storage space than text results. Therefore, there is a limit to the number of graphical files that the tester can store. Graphical files are not automatically overwritten like text-based files are, but can be manually deleted. Text-based files, on the other hand, take up less space

so the tester can store more files of this type. Table 7-1 gives you an indication of the tester's storage limitations for text-based files and the two types of graphical files.

Table 7-1. Storage Limitations of Saved Result Files

Type of File	Space Limitation
Text-based	Approximately 10,000 lines of data
Graphical TDR waveform	Ten files
Graphical frequency sweep	Ten files

Result File Header

When the tester stores a result, it saves it under a header. The top portion of Figure 7-3 shows you an example of a header. The header contains the following information:

- Wire Center Name

  A user-supplied name that identifies the primary work location. For instructions on how to specify or change the Wire Center name, see "Creating a Custom Header for Test Result Files" in Chapter 3.

- Facility Cable Number

  A user-supplied number that identifies the specific cable on which a test was performed. For instructions on how to supply or change this number, see "Generic and Test-Specific Setup Parameters" in Chapter 3.

- Pair/Terminal Number

  A user-supplied number that identifies the specific single cable pair, cross-box binding post, or inside terminal number on which a test was performed. For instructions on how to supply or change this number, see "Generic and Test-Specific Setup Parameters" in Chapter 3.

- Date/Time Stamp

  A record of the date and time that the test was conducted. The CopperPro automatically supplies this information.

If you do not supply the information in the aforementioned list, the header contains a Date/Time stamp only. Operator Name, Location, and Job Number can optionally be added to the header.

If a group of results shares the same header information (that is, Wire Center name, Facility Cable Number, and Pair/Terminal Number), one header appears immediately before the first saved result in the group and is not repeated for each subsequent result. This convention is used to conserve memory. However, any time you modify the information that is used for the header, the change is reflected in a new header that appears immediately before the group of results it pertains to.

If the elapsed time between tests is greater than ten minutes, the tester places a timestamp before the next test result. If the elapsed time between a group of tests is less than ten minutes, a timestamp is not posted before each result. Again, the purpose of this convention is to conserve memory.

Test results with the same Wire Center name are listed in the order in which the tests were conducted and under the name of the specific test. This grouping of results under a common Wire Center name allows results for multiple tests on the same pair to be easily identified.

Storing Test Results Automatically

The CopperPro features an automatic test storage option that saves the text-based results of all non-continuous tests except Auto-Tests. All relevant test data is saved and any failures (those results that exceed a preset Pass/Fail threshold) are highlighted in reverse video. Auto-Test results must be manually saved, as they require specific Test Identification information prior to storage.

The automatic test storage option allows you automatically store text-based files only. You must *manually* save graphical files (see "Saving a Displayed Waveform or Frequency Graph"), as well as text results for the Auto-Tests.

The automatic test storage option is enabled when the tester is shipped from the factory. If you want to turn off the option, do the following:

1. On the tester's front panel, press [SAVED RESULTS].

   The **Saved Results** selection screen (Figure 7-1) is displayed:

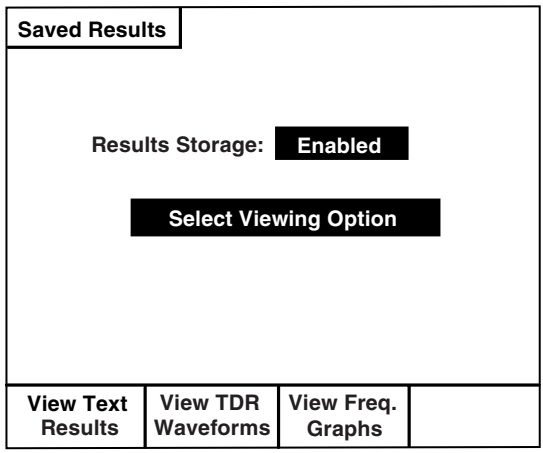

acy91s.eps

Figure 7-1. Saved Results Selection Screen

   The **Results Storage** field shows that automatic test storage is **Enabled**.

2. Press [1] (**Edit**) then ⊕ or ⊖ to change the automatic test storage setting to **Disabled**.

   The tester no longer automatically stores test results.

Saving a Displayed Waveform or Frequency Graph

To save a TDR waveform or frequency sweep graph, do the following:

1. Make sure that the TDR waveform or frequency sweep graph that you want to save is displayed on the tester's LCD.
2. Press [ENTER].

   The list of saved waveforms (see Figure 7-4) or frequency graphs (see Figure 7-5) is displayed.
3. Press ⊕ or ⊖ move the cursor to the desired storage position (1 through 10 for a TDR waveform and 1 or 2 for a frequency sweep graph).
4. If you want to make some notes about the waveform or graph, press [1](**Edit Remarks)**. Then, type your notes in the space provided.
5. Press [2](**Save**).

   The waveform or graph is saved in the storage position you selected. The tester also saves the associated setup information (for example, Vop, Pulsewidth, Cursor positions, and Filters employed).

Viewing Stored Test Results

To view test results that are stored in the tester's memory, press [SAVED RESULTS].

The **Saved Results** screen is displayed (see Figure 7-1). From this screen, you can view the following saved results:

- Text-based results
- TDR waveforms
- Frequency graphs.

The following sections provide instructions for viewing the three types of test results.

Viewing Text-based Results

To view stored text-based results, press [1] (**View Text Results**) on the **Saved Results** screen (Figure 7-1).

The **Select Viewing Option** screen (Figure 7-2) is displayed:

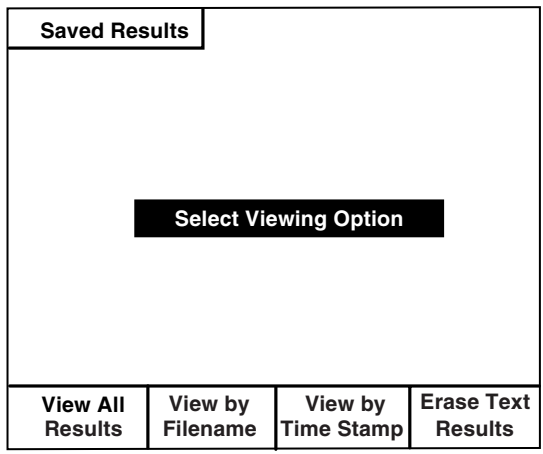

acy92s.eps

Figure 7-2. Saved Results Screen: Viewing Text Results

In Figure 7-2, you can select the following options:

- View all results
- View results for a particular Wire Center
- View results for a certain time period
- Erase all results.

These options are described in the following sections.

Viewing All Results

To view all stored text results, do the following:

1. On the **Saved Results** screen (Figure 7-2), press [1] (**View All Results**).

   A screen similar to that shown in Figure 7-3 is displayed. The tester lists all of the text-based results that are stored in memory, beginning with the oldest files (those with the earliest time stamp):

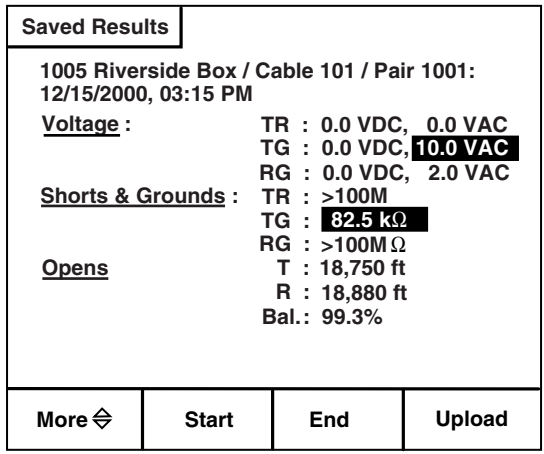

acy93s.eps

Figure 7-3. Saved Results: All Text Results

2. Use these softkeys to navigate through the list:
   - Press [1](**More**) then press ⊕ to page forward or ⊖ to page backward.
   - Press [2](**Start**) to display the first screen. The oldest results are on listed this screen.
   - Press [3](**End)** to display the last screen. The most recent results are listed on this screen.

Viewing Results for a Particular Wire Center

The CopperPro groups test results under Wire Center names. If you want to view test results for a particular Wire Center, do the following:

1. On the **Saved Results** screen (Figure 7-2), press [2](**View by Filename**).

   A list of Wire Center names with associated results is displayed.

2. Press [1](**More**) until you display the screen containing the desired Wire Center name.

3. Press ⊕ or ⊖ to move the cursor to the Wire Center name. Then, press [2](**View**).

   The results saved under the Wire Center name you selected are displayed.

Viewing Results for a Particular Period of Time

You can view results of tests conducted during a particular time period. To do this, complete the following:

1. On the **Saved Results** screen (Figure 7-2), press [3](**View by Time Stamp**).

2. When prompted, type both a starting date and time and ending date and time in the space provided.

3. Press [2](**View**).

   Test results for the time period you specified are displayed. The results are listed in chronological order, beginning with the starting date and time that you provided.

Erasing All Results

To erase all saved text results from the tester's memory, do the following:

1. Display the **Saved Results** screen (Figure 7-2).
2. Press [4](**Erase Text Results**).

   All saved text results are permanently deleted from the tester's memory.

Viewing TDR Waveforms

To view stored TDR waveforms, do the following:

1. On the **Saved Results** screen (Figure 7-1), press [2](**View TDR Waveforms**).

   The list of TDR waveforms stored in the tester's memory is displayed, as shown in Figure 7-4:

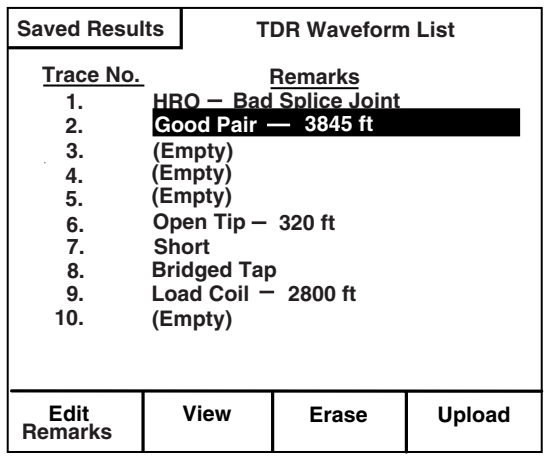

acy94s.eps

Figure 7-4. Saved Results: List of TDR Waveforms

2. To view a waveform, press ⊕ or ⊖ to select it. Then, press [2](**View**).
3. If you want to edit the notes you made about the waveform, select the waveform, then press [1](**Edit Remarks**). In the space provided, type the desired information.

Deleting a Saved Waveform

To delete a saved TDR waveform, do the following:

1. Display the list of TDR Waveforms (see Figure 7-4). Then, press ⊕ or ⊖ to select the desired waveform.
2. Press [3](**Erase**).

   The selected waveform and associated remarks are permanently deleted from the tester's memory.

Viewing Stored a Frequency Sweep Graph

To view a stored frequency sweep graph, do the following:

1. On the **Saved Results** screen (Figure 7-1), press [3](**View Freq. Graphs**).

   The **Frequency Sweep Graph List** (Figure 7-5) is displayed:

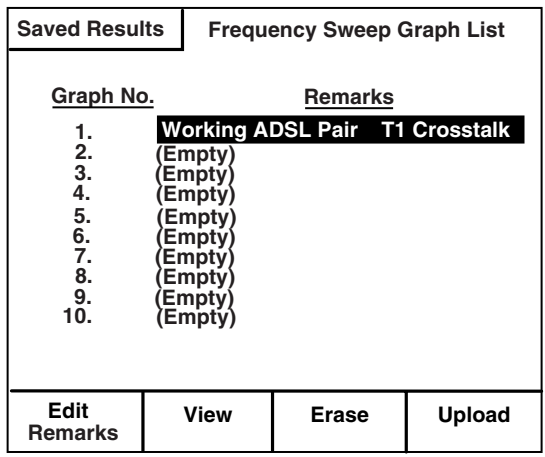

acy95s.eps

Figure 7-5. Saved Results: List of Frequency Sweep Graphs

2. Press ⊕ or ⊖ to select the graph. Then, press [2](**View**).

4. If you want to edit the notes you made about the graph, select the graph, then press [1](**Edit Remarks**). In the space provided type the desired information.

Deleting a Saved Frequency Graph

To delete a saved frequency graph, do the following:

1. Display the list frequency sweep graphs (see Figure 7-5). Then, press ⊕ or ⊖ to select the graph.

2. Press [3](**Erase**).

   The selected graph and associated notes are permanently deleted from the tester's memory.

Printing Test Results

To print a saved text result, TDR waveform trace, or a frequency sweep graph, do the following:

1. Connect the CopperPro to a serial graphics printer (see "Connecting to a Printer" in Chapter 2) using the optional Printer Cable.

2. Select the proper printer type in User Options "RS232 Port Setup" (default is Seiko DPU-414).

3. To print a displayed TDR waveform or graph:

   - Press ◯ then [SAVED RESULTS] ("Print Screen" function)
   - Press [1] (**Printer**)
   - The screen graphic image will be printed

4. To print text-based test results:

   - Select the desired results (view by wire center, time stamp, or all)
   - Press ◯ then [SAVED RESULTS] ("Print Screen" function)
   - Press [1] (**Print Screen**) to print only the results displayed on the screen, then [1] (**Printer**) or
   - Press [2] (**Print Results**) to print the range of selected results.

Uploading Test Results to a PC

To upload saved test results (both text-based and graphical ASCII files) to a PC, do the following:

1. Connect the CopperPro to a PC (see "Connecting to a PC" in Chapter 2) using the supplied serial cable.
2. Set up a standard PC communications program (HyperTerminal, TeraTerm, etc.) as follows:
   - Baud rate = **38,400** bps, **8** Data bits, **1** Stop bit, **No** Parity, **No** Flow Control.
3. On the tester's LCD, display one of the following:
   - Text-based results (as shown in Figure 7-3)
   - The list of TDR waveforms with the desired trace selected (as shown in Figure 7-4)
   - The list of frequency sweep graphs with the desired graph selected (as shown in Figure 7-5).
4. Start the PC communications program.
5. Uploading:
   - Text Based Results- Press [4] (**Upload**), then either [1] (**Column Format**) to use the normal column viewing format; or [2] (**Spreadsheet Format**) to use a "tab-delimited" format for direct importing into a spreadsheet program. The ASCII data will begin uploading.
   - TDR Waveform or Graph- Press [4] (**Upload**) and the ASCII data will immediately begin uploading to the PC in tab-delimited format for spreadsheet compatibility.

Note

To transfer a graphic screen image to a PC, rather than the data file described above, see "Transferring a Screen Image to PC" in Chapter 3.

Chapter 8
Updating the CopperPro with New Software

Introduction

Periodically, Fluke Networks releases software updates for your 990DSL CopperPro Loop Tester. When an update is available, you can download it from the Fluke Networks website at http://www.flukenetworks.com.

The process of updating the CopperPro with new operating software consists of three basic steps:

1. Connect the CopperPro to a personal computer (PC).
2. Put the CopperPro in download mode.
3. Install the software update program on the PC and download the files to the CopperPro.

This chapter provides instructions for each step in this process.

Before You Begin

Before you begin, you must have the following:

- An IBM compatible PC with these minimum features:
  - At least one available RS-232 serial port. (The serial port must have a nine-pin interface or an adapter that converts the serial port to a nine-pin interface.)
  - Windows 95, 98, 98SE, Me, NT (Version 4.0 or 2000), or XP.
- The serial RS-232 cable that was supplied with the CopperPro.
- The ability to connect to the Internet and access the Fluke Networks web site.

Step One: Connect the Tester to a PC

To connect the CopperPro to a PC, complete the following:

1. Connect one end of the supplied RS-232 cable to the nine-pin RS-232 serial port on the tester's side connector panel (see Figure 2-1).
2. Connect the other end of the RS-232 cable to an available serial port on the PC.

Step Two: Put the Tester in Download Mode

To put the CopperPro in download mode, do the following:

1. Turn on the CopperPro.
2. Press ◯, then [❶].

   The **USER OPTIONS** menu is displayed.

3. Select **Program Download**. Then press ENTER

   The CopperPro displays the **DOWNLOAD MODE** screen (Figure 8-1):

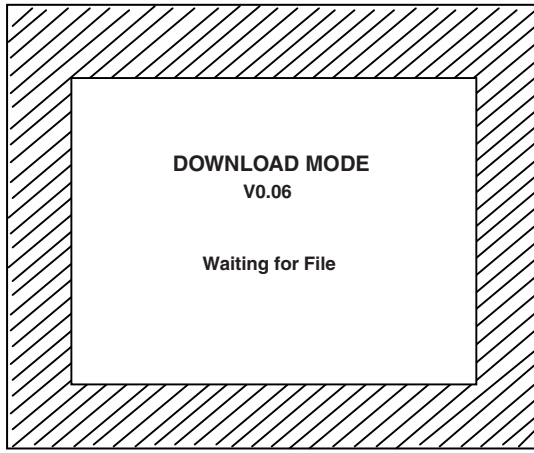

acy89s.eps

Figure 8-1. Download Screen: Waiting for File

The "*Waiting for File*" message indicates that the CopperPro is in download mode and ready to receive the files to update the software.

Note

Another way of entering the download mode is to power the tester up while holding ENTER *down.*

Step Three: Update the Tester's Software

The update software is available from the Fluke Networks website (www.flukenetworks.com). To obtain the software, your PC must have a connection to the Internet and have a web browser installed that is capable of executing programs from the Internet. Microsoft Internet Explorer Version 5.0 (or later) performs this function. The following instructions assume that you are using Microsoft Internet Explorer 5.0 (or later).

1. Start your Internet Web browser and verify that you have a connection to the Internet.

2. Access the following web address (URL):
   http://www.flukenetworks.com/CopperPro/Update/versionxxx/cpflash.exe

   The browser displays the **File Download** window.

3. In the **File Download** window, select **Run this program from its current location**. Then, click **OK**.

   The download process begins. After the program is downloaded, the browser may display a **Security Warning** window.

4. Click **Yes** if the Security Warning window is displayed.

   Your PC displays this message: "*Searching for CopperPro*".

   After the program detects the CopperPro, it begins updating the tester's Flash memory. Messages are displayed on the PC to indicate the type of data that is being transferred from the PC to the CopperPro.

Note

If the program does not detect the CopperPro, it prompts you to supply the correct serial port.

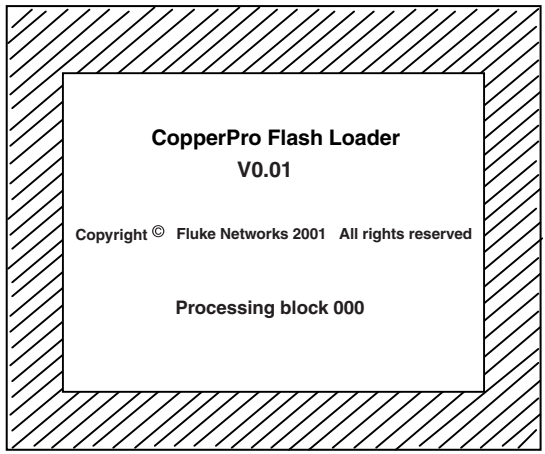

acy88s.eps

Figure 8-2. Final Download Screen

The Flash update occurs in blocks of flash data. The update begins with the highest numbered block and works toward zero. The CopperPro displays this progression as a series of "*Processing block 0XX*" messages. The value XX represents the number of the block that is being transferred. The number of the first block, however, is not determined until the Flash update is created.

After Flash memory block 000 is finished processing (see Figure 8-2), the CopperPro automatically powers down. The download process is completed.

5. Disconnect the RS-232 cable from the PC and the tester.

   You can now operate the CopperPro with the new version of software.

Appendices

Appendix A
Features and Specifications

Introduction

Appendix A describes the physical and operational characteristics of your 990DSL CopperPro Series II Broadband Loop Tester.

Physical

Size: (H x W x D): approximately 25 cm x 13.5 cm x 8.1 cm (9.8” x 5.3” x 3.2”) (does not include the softcase and test leads)

Weight: 1.8 kg (4.0 lbs.) (does not include the softcase and test leads)

Display: 320 x 240 pixel graphic LCD with backlight and adjustable contrast

LED Indicator: charging status indicator (located on the side connector panel)

Communication Port: RS-232 PC and printer port (DB-9)

Power

AC Operation: operates from an external AC adapter/charger

Battery Type: operates from an internal removable NiMH rechargeable battery pack (installed)

Battery Life: a fully charged battery provides approximately 16 hours of normal testing usage and approximately 4 hours of continuous TDR or Broadband testing usage

Battery Recharge Time: 2 to 3 hours (in the tester) for a fully discharged battery pack

Environmental

Operating Temperature: (unless otherwise specified) -20° C to +60° C (-4° F to +140° F)

Storage Temperature: -40° C to +70° C (-40° F to +158° F)

Battery Charging Temperature: 10° C to 40° C (50° F to 104° F)

Humidity Tolerance (operation without condensation): 95 %

Rain Resistance: IEC60529 IP02, Ingress Protection: water dripping

Vibration: Random, 2 g, 5 Hz to 500 Hz

Shock: 1 Meter Drop Test

Altitude: 4500 m (15,000 ft)

Standards Compliance

Analog Transmission Parameter Measurement: IEEE 743-1995

ADSLx / VDSLx Metallic Interface: ANSI T1.413 Issue 2;

ITU G.992.1a,b; G.992.2ab; G.992.3a,b,l,m; G.992.5a,b; G.993.1; G.993.2

Regulatory Compliance

Safety: CAN / CSA-C22.2 No 61010-1

CE:

- EN 61326 Class A Emissions and Immunity
- EN 61010-1

Operational Specifications

Function	Range	Accuracy
AC Voltage	0 V to 220 V, 60Hz	1 % ±0.5 V
DC Voltage (R_{IN} = 100 kΩ, default; 1 MΩ or 10 MΩ, optional	0 V to 150 V	1 % ±0.5 V
	150 V to 240 V	2 %
	240 to 300 V	3 %
DC Loop Current (430 Ω)	0 mA to 120 ma	2 % ±0.3 mA
Resistance	0 Ω to 100 Ω	0.1 % ±0.10 Ω
(Shorts & Grounds)	100 Ω to 4 k Ω	0.3 % ±0.10 Ω
	4 k Ω to 999 M Ω	3 %
Leakage Stress	2 k Ω to 999 M Ω	3 %
Opens	0 ft to 3000 ft	1 % ±5 ft
	3 kft to 50 k ft	3 %
	50 kft to 80 k ft	5 %
Splits	0 kft to 50 k ft	10 % DTE ±50 ft[1]

Operational Specifications (continued)

Function	Range	Accuracy
RFL		
Fault Resistance (Rf)	0 M Ω to 30 M Ω	-
Loop resistance	0 Ω to 4000 Ω	-
Resistance to Fault	0 Ω to 100 Ω	0.1 % RTS[2] ±0.10 Ω
(@ Rf = 100 kΩ)	100 Ω to 4 k Ω	0.3 % RTS[2] ±0.10 Ω
K-Test Res. To Fault	0 Ω to 4 k Ω	1 % RTS[2] ± 1 Ω
Load Coils		
Count	0 to 6	±1
Distance to First	0 to 12,000 ft	10 % ± 500 ft
Tracing Tone		
Frequency	577.5 Hz	0.1 %
Level	>3.5 V peak-to-peak	10 %
VF Noise		
Impedance	600 Ω, 900 Ω, Bridged[3]	1 %
Filters	C, C-Notched, 3 k Flat, 15 k Flat, Psopho.	-
Metallic Noise	0 dBrn to 10 dBrn	±2 dB
	10 dBrn to 100 dBrn	±1 dB
Power Influence	40 dBrn to 120 dBrn	±2 dB
Power Harmonics	-60 dBm to +20 dBm (50 Hz to 3 kHz)	±2 dB
VF Loss		
Signal Level	-40 dBm to +10 dBm	Single Tone: ± 1 dB SmartTone: ± 2 dB
Frequency	100 Hz to 20 kHz	0.1 % ±2 Hz

Operational Specifications (continued)

Function	Range	Accuracy
VF Long. Balance	0 dB to 70 dB	±2 dB
Disturbing Frequency	200 Hz to 2000 Hz	0.1 %
Impedance	600 Ω, 900 Ω	1 %
Send VF Tone		
Frequency	100 Hz to 20 kHz	0.1 %
Amplitude (Settable)	-20 dBm to +3 dBm	±0.5 dB (1 dB steps)
Impedance	600 Ω, 900 Ω	1 %
WB/BB Noise/Level		
Impedance	100 Ω, 135 Ω, Bridged[4]	1 %
Filters	E, F, G, 1.3 MHz, 20 MHz	-
Frequency	10 kHz to 1.2 MHz[5]	0.1%, 508.63 Hz multiples
	25 kHz to 18 MHz[6]	0.1%, 4312.5 Hz multiples
Amplitude	+3 dBm to -50 dBm	±1 dB[7] (Bridged = ±3 dB Typical)
	-50 dBm to -90 dBm	±3 dB[7] (Bridged = ±3 dB Typical)
	-90 dBm to -105 dBm	±3 dB Typical[7]
Noise Floor	-140 dBm/Hz Typical	-

Operational Specifications (continued)

Function	Range	Accuracy
WB/BB Loss		
Impedance	100 Ω, 135 Ω	1 %
Frequency	10 kHz to 1.2 MHz[5]	0.1%, 508.63 Hz multiples
	25 kHz to 18 MHz[6]	0.1%, 4312.5 Hz multiples
Magnitude	0 dB to 50 dB	±1 dB[7]
	50 dB to 90 dB	±3 dB[7]
HDSL2/4 Loop Atten.	0 dB to 70 dB	±2 dB
WB/BB Long. Balance	0 dB to 20 dB	±3 dB[7,9]
	20 dB to 40 dB	±2 dB[7,9]
	40 dB to 50 dB	±3 dB[7,9]
	50 dB to 55 dB	±3 dB Typical[7,9]
Disturbing Frequency (Single Tone)	25 kHz to 18 MHz	0.1%, 4312.5 Hz multiples
Disturbing Frequency (70 Tone Multi-Tone)	0.25 MHz to 18 MHz	0.1%, 4312.5 Hz multiples
Impedance	135 Ω, < 1.2 MHz 100 Ω, > 1.2 MHz	1 %
Filter	1.3 MHz, < 1.2 MHz 20 MHz, > 1.2 MHz	-

Operational Specifications (continued)

Function	Range	Accuracy
Send WB/BB Tone		
Frequency	10 kHz to 1.2 MHz[5]	0.1%, 508.63 Hz multiples
	25 kHz to 18 MHz[6]	0.1%, 4312.5 Hz multiples
Amplitude	0.0 dBm (fixed)	±1 dB
Impedance	100 Ω, 135 Ω	1 %
WB/BB Impulse Noise		
Impedance	100 Ω, 135 Ω, Bridged[4]	1 %
Filters	E, F, G, 1.3 MHz, 20 MHz	-
Test Time	1 to 1440 minutes (24 hrs.)	1 %
Impulse Counter	0 to 9999	-
Counter Threshold	0 dBm to -40 dBm -40 dBm to -50 dBm	±1 dB[8] ±3 dB[8] (Typical)
Count Interval	8 / second	-
DSL Auto-Test		
Data Rate Estimation		
ADSL/2 (1.104 MHz)	0 – 8 Mb/s	±0.1 Mb/s (Typical)
ADSL2+ (2.208 MHz)	0 - 16 Mb/s	±0.2 Mb/s (Typical)
VDSL (17.664 MHz)	0 - 55 Mb/s	± 2 Mb/s (Typical)
VDSL2 (30 MHz)	TBD	TBD

Operational Specifications (continued)

Function	Range	Accuracy
TDR Specifications		
Launch Pulse		
Impedance	100 Ω	1 %
Pulse-width	20 ns, 100 ns, 500 ns, 1000 ns, 2500 ns, 5000 ns	10 % ±5 ns
VOP Selection	0.300 to 0.999	-
Range (VOP = 0.64, 19 Ga.)	30,000 ft	-
Range Selection	10 ft to 48 kft (Auto.)	-
Horizontal Resolution	0.5 ft to 156 ft	-
Distance to Reflection	0 ft to 30,000 ft	1 % ±VOP uncertainty
Vertical Gain	80 dB	2 dB
Power Filter	5 kHz Highpass	-
Averaging Filter	4 waveform average	-
Input Protection	±400 V peak	-

[1]Dist. to End; Dist. to Split >50 ft; Split pairs must be same length ±5 %. [2]RTS = Resistance to Strap; [3]Bridged = >100 k Ω; [4]Bridged = >5 k Ω; [5]Nyquist (Fine) resolution; [6] DMT (Coarse) resolution; [7] @ 25°C ± 25°C; battery-powered; [8]Accuracies specified with E, F, G, and 1.3 MHz filters @ center frequencies, with 100 Ω or 135 Ω terminations. Additional +/- 2 dB (typ.) tolerance required for 20MHz filter; [9]0.25 MHz to 12 MHz. Additional ±1 dB tolerance required from 12 MHz to 17.5 MHz.

Appendix B
Replacement Parts and Accessories

Introduction

Appendix B provides information about the replacement parts and optional accessories that you can obtain for the 990DSL CopperPro Loop Tester. To order accessories, call one of the following numbers:

USA: 1-888-993-5853

Canada: 1-800-363-5853

Europe: +44-(0) 1923 281 300

Japan: 03-3434-0510

Singapore: 65 6799-5566

Anywhere in the world: +1-425-446-4519

Replacement Parts

Table B-1 lists replacement parts that you can purchase for the tester. Refer to Figure B-1 for an illustration of the replacement parts listed in this table. Use the Item Number to locate the part.

Table B-1. Replacement Parts for the CopperPro Loop Tester

Item Number	Description
1	Holster
2	Battery Door
3	Shoulder Strap
4	Softcase
5	RS-232 Cable
6	Pair 2Test Lead Set (Yellow/Blue)
7	Shielded Pair 1 Test Lead Set (Red/Black)
8	Ground Test Lead (Green)
Not Shown	990DSL Series II Users Guide
Not Shown	990-Printer Cable

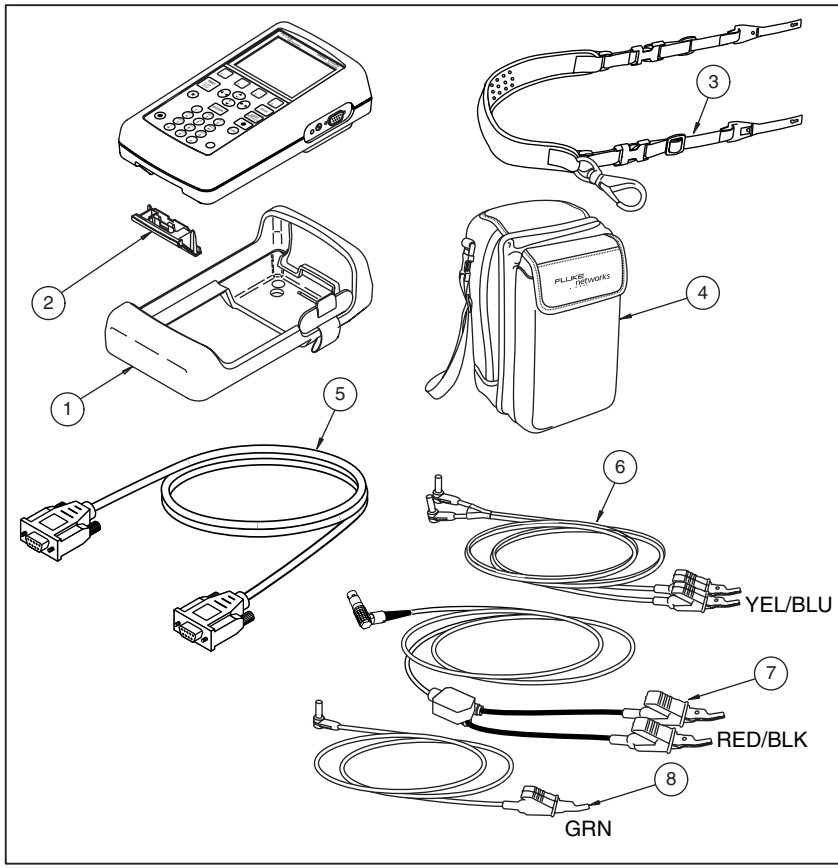

elf76f.eps

Figure B-1. Replacement Parts

Table B-2 lists the optional accessories that are available for the CopperPro. Use the number in the Item Number column to locate the listed accessory in Figure B-2.

Table B-2. Optional Accessories for the CopperPro Loop Tester

Item Number	Description
1	Deluxe Soft Case
2	NiMH Extra Battery Pack
3	External Battery Charger NiMH INTL with Power Supply
4	External Battery Charger NiMH 120V with Power Supply
5	Test Lead Set, Shielded Pair 1
6	Test Lead Set, Spike + No Bed of Nails Contacts
7	Test Lead Set, No Spike + Bed of Nails Contacts
8	Test Lead Set, No Spike + No Bed of Nails Contacts
9	12V Vehicle Battery Charger/Adapter
Not Shown	990DSL Serial Graphics Printer
Not Shown	990 Serial Printer Cable

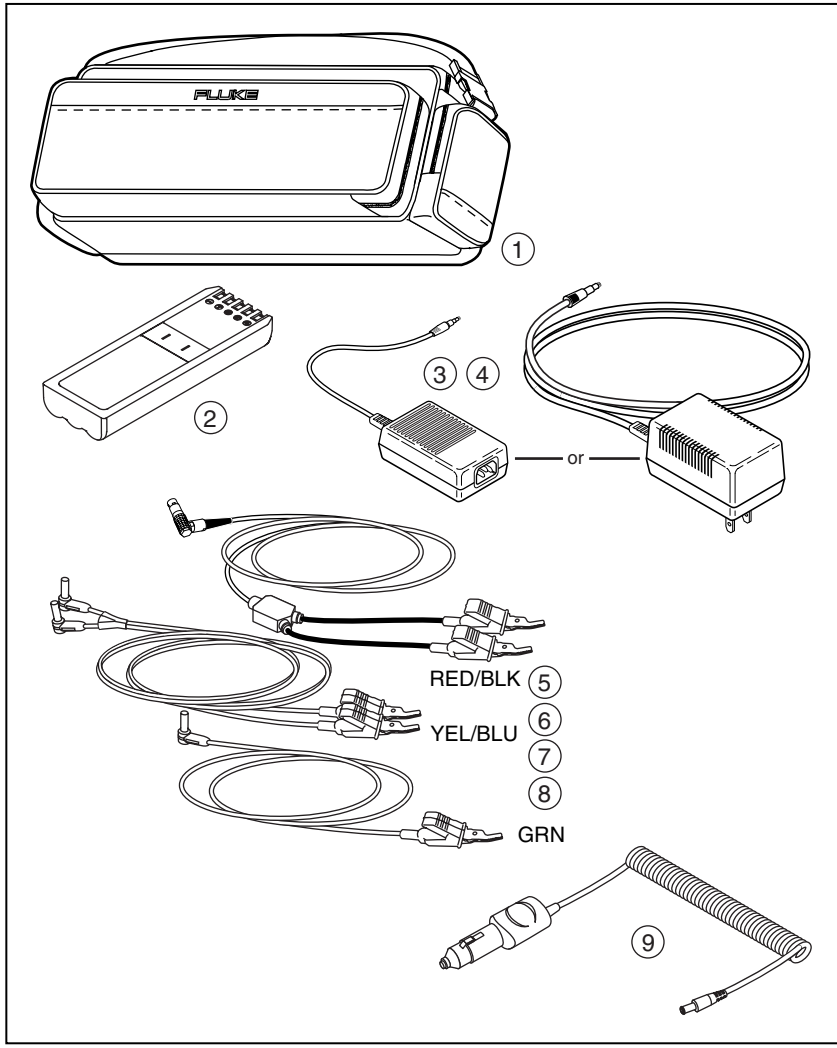

elf77f.eps

Figure B-2. Optional Accessories

Index

—E—

—F—

—G—

—H—

—I—

—K—

—L—

—M—

—O—

—P—

—R—