TEquipment USA .NET
An Interworld Highway, LLC Company

D-Series Thermal Camera

Installation Manual

FLIR Commercial Systems, Inc.
70 Castilian Drive
Goleta, CA 93117
Phone: 888.747.FLIR (888.747.3547)
International: +1.805.964.9797
www.flir.com

Document Number: 427-9029-00-12
Version: 120
Issue Date: January 2012

© FLIR Commercial Systems, Inc., 2012. All rights reserved worldwide. No parts of this manual, in whole or in part, may be copied, photocopied, translated, or transmitted to any electronic medium or machine readable form without the prior written permission of FLIR Commercial Systems, Inc.

Names and marks appearing on the products herein are either registered trademarks or trademarks of FLIR Commercial Systems, Inc. and/or its subsidiaries. All other trademarks, trade names, or company names referenced herein are used for identification only and are the property of their respective owners.

This product is protected by patents, design patents, patents pending, or design patents pending.

FEDERAL COMMUNICATIONS COMMISSION REGULATORY INFORMATION
Modification of this device without the express authorization of FLIR Commercial Systems, Inc., may void the user's authority under the FCC Rules to operate this device. Note: This equipment has been tested and found to comply with the limits for a Class A digital device, pursuant to part 15 of the FCC Rules. These limits are designed to provide reasonable protection against harmful interference when the equipment is operated in a commercial environment. This equipment generates, uses, and can radiate radio frequency energy and, if not installed and used in accordance with the instruction manual, may cause harmful interference to radio communications. Operation of this equipment in a residential area is likely to cause harmful interference in which case the user will be required to correct the interference at his own expense. Shielded cables must be used to connect this device to other devices.

FLIR Commercial Systems, Inc.
70 Castilian Drive
Goleta, CA 93117

Phone: +1.888.747.FLIR (+1.888.747.3547)

Document History

Revision	Date	Comment
100	July 2011	Initial Release
110	August 2011	Added cable gland sealing details and additional software functionality.
120	January 2012	Approved for public release, removed 9Hz from title of document

This equipment must be disposed of as electronic waste.
Contact your nearest FLIR Commercial Systems, Inc. representative for instructions on how to return the product to FLIR for proper disposal.

This document is controlled to FLIR Technology Level EAR 1. The information contained in this document is proprietary and/or restricted and pertains to a dual use product controlled for export by the Export Administration Regulations (EAR). This document and data disclosed herein or herewith is not to be reproduced, used, or disclosed in whole or in part to anyone without the written permission of FLIR Systems, Inc. Diversion contrary to US law is prohibited. US Department of Commerce authorization is not required prior to export or transfer to foreign persons, parties, or uses otherwise prohibited.

Table of Contents

1 D-Series Camera Installation

1.1 Warnings and Cautions 1-1
1.2 Installation Overview 1-2
1.3 Installation Components 1-2
1.4 Location Considerations 1-3
1.5 Camera Enclosure Mounting 1-4
1.6 Camera Gimbal Assembly Installation 1-5
1.7 Electrical Connections and Schematics 1-6
1.7.1 Cable Gland Sealing 1-6
1.7.2 Cable Gland Inserts 1-6
1.7.3 Typical Cable Schematic 1-6
1.7.4 Connector Signal Description 1-7
1.7.5 Opening the Electronics Enclosure 1-9
1.7.6 Connecting power 1-10
1.7.7 Video Connections 1-10
1.7.8 Ethernet Connection 1-10
1.7.9 Serial Connections 1-10
1.7.10 Setting Configuration Dip Switches 1-11
1.8 D-Series Camera Specifications 1-13

2 Verify Camera Operation

2.1 Power and analog video 2-1
2.2 Verify IP Communications 2-1
2.3 Using FLIR Sensors Manager (FSM) 2-3
2.3.1 Running FSM 2-3
2.4 D-Series Configuration 2-6
2.4.1 Set the Date and Time 2-6
2.4.2 Serial Remote Menu 2-7
2.4.3 Digital Video Configuration—Video IR and Video DLTV 2-8
2.4.4 Configuration File 2-9
2.4.5 LAN Settings 2-9

A Mechanical ICD Reference

1 D-Series Camera Installation

This manual describes the installation of the D-Series cameras. If you need help during the installation process, please call to speak with our support experts (877-773-3547).

This manual includes the following topics:

- Installation Overview
- Mounting the camera and its components
- Connecting the electronics

For safety, and to achieve the highest levels of performance when handling and operating the D-Series camera system, always follow the warnings and cautions in this manual.

1.1 Warnings and Cautions

WARNING!

If mounting the D-Series camera on a pole, tower or any elevated location, use industry standard safe practices to avoid injuries.

Caution!

Except as described in this manual, do not open the D-Series camera for any reason. Disassembly of the camera (including removal of the cover) can cause permanent damage and will void the warranty.

Be careful not to leave fingerprints on the D-Series camera's infrared optics.

The D-Series camera requires a 24 Volt power supply (ac or dc). Operating the camera outside of the specified input voltage range or the specified operating temperature range can cause permanent damage.

Note

The D-Series IR Thermal Imaging System is an Export Controlled item. Authorization by the U.S. Government must be obtained prior to export outside the United States.

1.2 Installation Overview

The D-Series Camera is a multi-sensor camera system on a pan/tilt platform. Combinations of an infrared thermal imaging camera and a visible-light video camera are intended for outdoor installations.

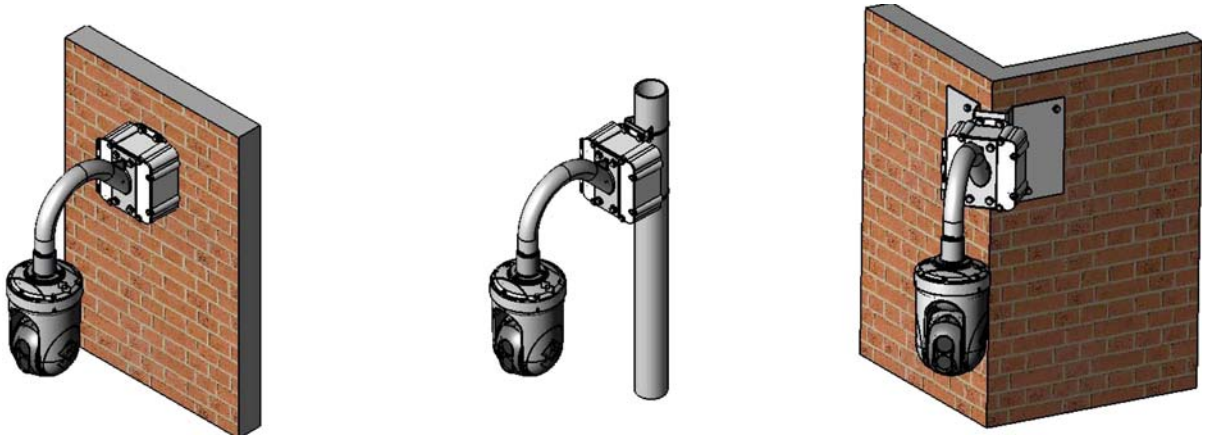

Figure 1-1: D-Series Camera Installations

The D-Series camera is mounted on a wall or a pole with diameter between 4" and 8.5". The wall or pole must be able to support up to 45 lbs. (20 kg). Cables exit from the back or the bottom of the electronics enclosure.

The D-Series camera is both an analog and an IP camera. The video from the camera can be viewed over a traditional analog video network or it can be viewed by streaming it over an IP network using MPEG-4, M-JPEG and H.264 encoding. Analog video will require a connection to a video monitor or an analog matrix/switch. The IP video will require a connection to an Ethernet network switch and a computer with the appropriate software for viewing the video stream.

The camera can be controlled through either serial or IP communications providing streaming video over an IP network.
The camera operates on 21 - 30 VAC or 21 - 30 VDC. Refer to paragraph 1.8 "D-Series Camera Specifications" on page 1-13 for power and current ratings.

In order to access the electrical connections and install the cables, it is necessary to open the electronics enclosure. Open the electronics enclosure by loosening the six captive 1/4-20 hex head cap screws.

1.3 Installation Components

The D-Series camera includes these standard components:

- Multi-sensor Pan/Tilt Camera Gimbal Assembly
- Camera Mount Enclosure Assembly
- FLIR Sensors Manager CD
- D-Series Camera Documentation Package (including installation mounting templates)

The installer will need to supply the following items, the lengths of which are specific to the installation.

- Electrical wire, for system power. Refer to paragraph 1.7 “Electrical Connections and Schematics” on page 1-6 for additional information)
- Camera grounding strap
- Coaxial RG59U video cables for analog video
- Shielded Category 6 Ethernet cable for control and streaming video over an IP network; and also for software upgrades.
- Optional serial cable for serial communications.
- Miscellaneous electrical hardware, connectors, and tools

1.4 Location Considerations

The camera will require connections for power, communications (IP Ethernet, and/or RS232/RS422}, and video (two video connections may be required for analog video installations).

Important Note

Even if the camera will only be operated with serial controls, install the camera with an easily accessible Ethernet connection to support future software upgrades.

Refer to paragraph 1.7 “Electrical Connections and Schematics” on page 1-6 for interconnect diagrams showing system configurations.

Ensure that cable distances do not exceed the Referenced Standard specifications and adhere to all local and Industry Standards, Codes, and Best Practices.

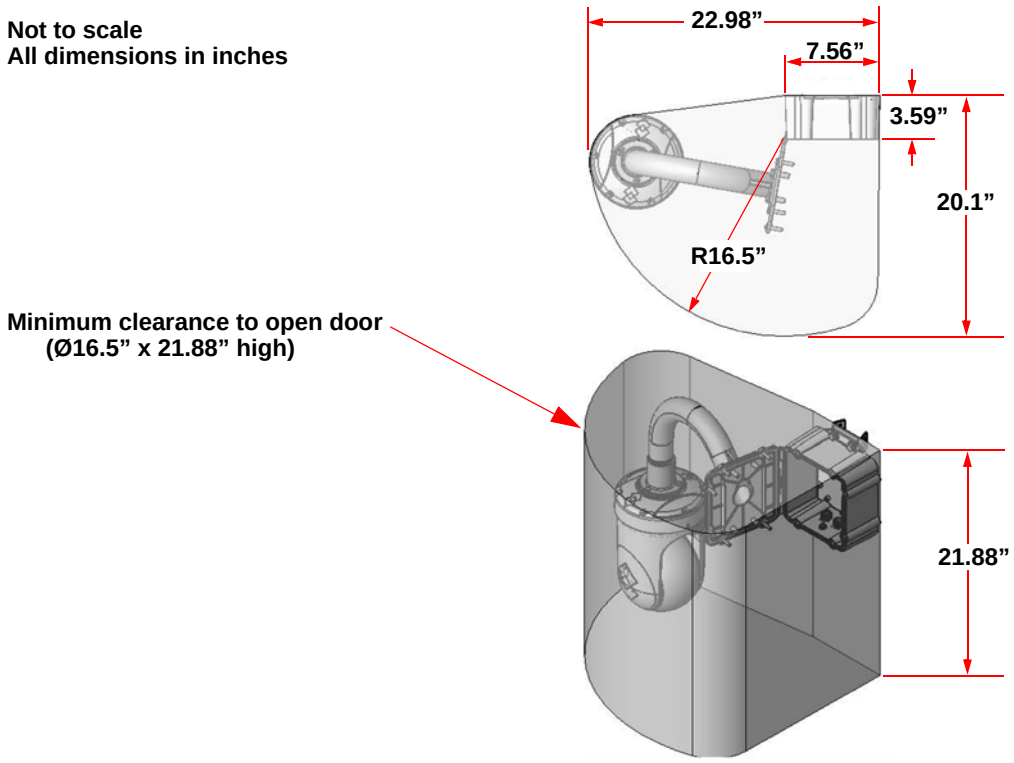

Figure 1-2: D-Series Installation

1.5 Camera Enclosure Mounting

Prior to cutting/drilling holes; when selecting a mounting location for the D-Series camera enclosure, consider cable lengths and cable routing. Ensure the cables are long enough given the proposed mounting locations and cable routing requirements.

Use cables that have sufficient dimensions to ensure safety (for power cables) and adequate signal strength (for video and communications).

The D-Series camera enclosure can be secured to the mount or mounting surface with four 3/8 or M8 fasteners, as shown below. The fastener/anchor type is dependant on the mount or mounting surface. Use a thread locking compound such as Loctite 242 or equivalent with all metal to metal threaded connections.

Using the template supplied as a guide, mark the location of the holes for mounting the camera enclosure. If the template is printed, be sure it is printed to scale so the dimensions are correct. See "D-Series Mounting Template" on page A-2.

Once the holes are drilled in the mounting surface, install four (4) 3/8 or M8 bolts through the attachment points of the Camera Mount Enclosure as shown in Figure 1-3.

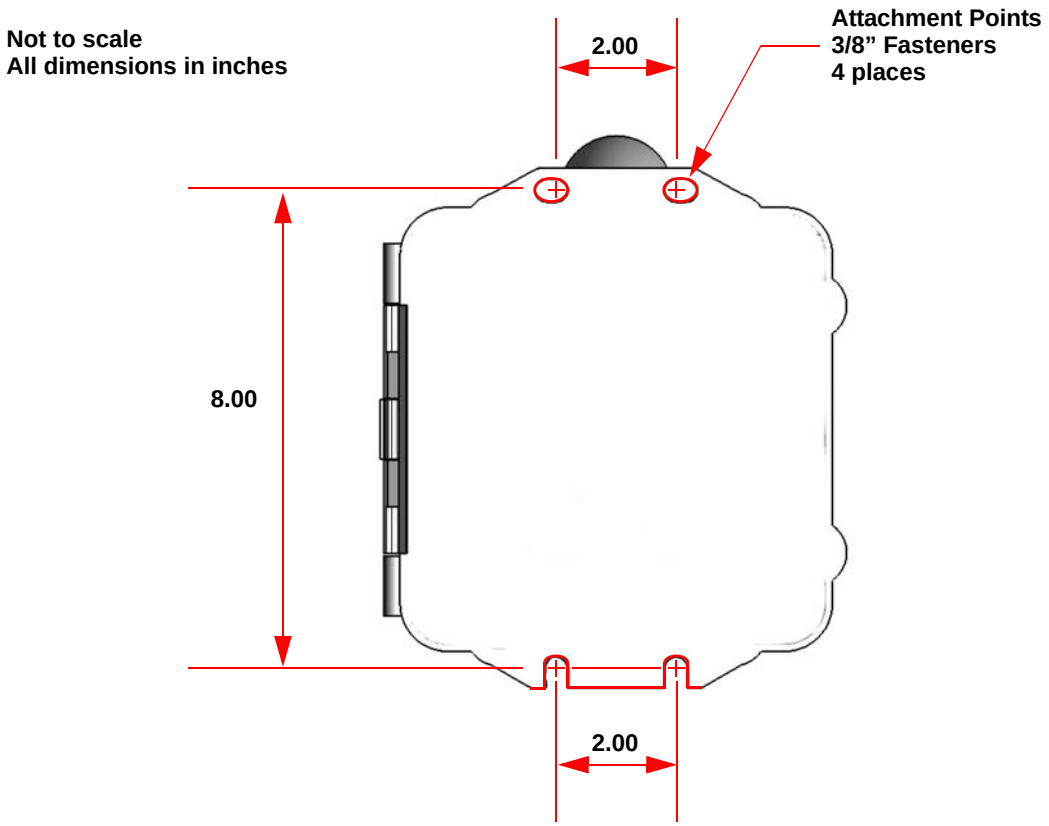

Figure 1-3: D-Series Camera Mount Enclosure

Important Note

If the camera is to be mounted on a pole or tower or other hard-to-reach location, connect and operate the camera as a bench test at ground level prior to mounting the camera in its final location.

1.6 Camera Gimbal Assembly Installation

The D-Series camera gimbal assembly is shipped as a separate item and must be attached to the camera mount enclosure. In order to allow flexibility during installation, the camera assembly may be installed either before or after installing the camera mount.

The following items are required when attaching the camera gimbal assembly:

- Silicone o-ring AS568A-228 (included with camera assembly)
- Parker Super O-lube P/N SLUBE 884-2 or equivalent
- three self-sealing M6-1.0 X 16 flat head Phillips screws (included with camera assembly)
- thread locking compound such as Loctite 242

Note

> The mount gooseneck has a locator pin to ensure that the camera assembly is installed correctly.

Step 1 Apply a thin layer of o-ring lubricant to the o-ring and install into its raceway on the camera assembly.

Step 2 Ensure that the lanyard from the mount gooseneck is oriented as shown below.

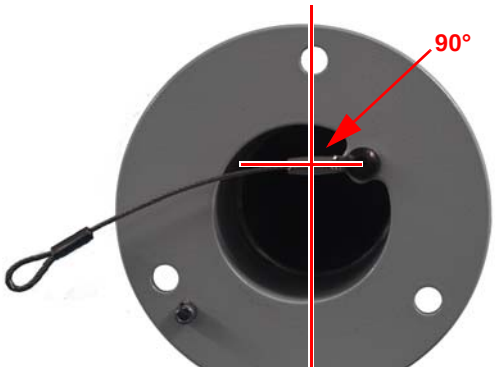

Step 3 Attach the lanyard from the mount gooseneck to the hook on the camera gimbal assembly.

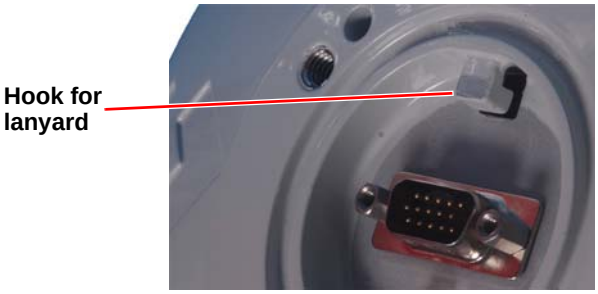

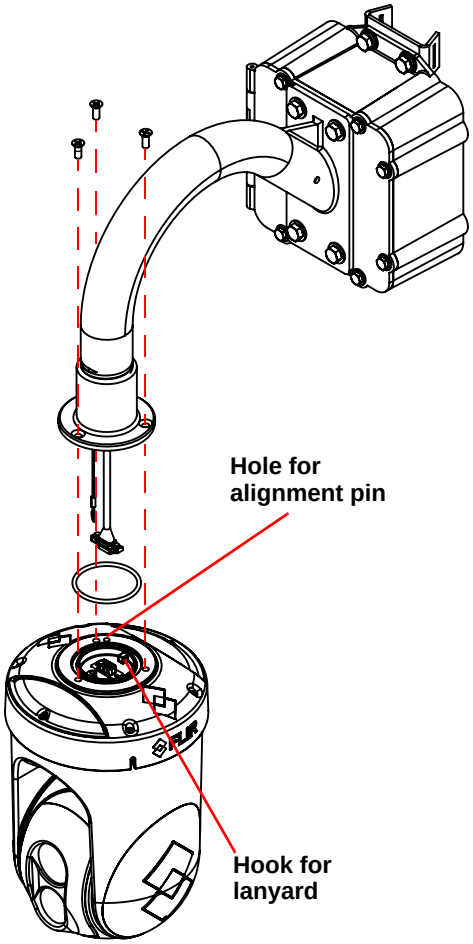

Step 4 Plug the connector from the mount gooseneck into the mating connector on the camera assembly.

Step 5 Apply a drop of thread locking compound to each of the three flat head screws and alternately tighten and torque to 35.2 in-lbs.

1.7 Electrical Connections and Schematics

1.7.1 Cable Gland Sealing

Proper installation of cable sealing glands and use of appropriate elastomer inserts is critical to long term reliability. Cables enter the camera mount enclosure through liquid-tight compression glands. Be sure to insert the cables through the cable glands on the enclosure before terminating and connecting them (the connectors will not fit through the cable gland). Leave the gland nuts loosened until all cable installation has been completed. Inspect and install gland fittings in the access plates with suitable leak sealant and tighten to ensure water tight fittings. Teflon tape or pipe sealant (i.e. DuPont RectorSeal T™) are suitable for this purpose.

Recommended installation torque for specific Thomas and Betts brand cable gland fittings is:

7.6 newton-meter

1.7.2 Cable Gland Inserts

For reference multi-hole inserts:

½ NPT gland fitting inserts typically accept 0.19” to 0.25” diameter cables.

1.7.3 Typical Cable Schematic

Note

> Be sure to insert the cables through the cable glands on the enclosure before terminating and connecting them. In general, the terminated connectors will not fit through the cable gland.

The D-Series enclosure comes with two ½ NPT gland fitting inserts, each with a three hole grommet. Cables may be between 0.19" to 0.25" od. Typically up to five cables may be needed and plugs (supplied with the system) are required to fill the grommet holes not being used.

If non-standard cable diameters are used, you may need to locate or fabricate the appropriate insert to fit the desired cable. FLIR Commercial Systems, Inc. does not provide cable gland inserts other than what is supplied with the system.

D-Series enclosure cable connections are shown schematically in Figure 1-4.

Typical recommended service loops are shown in Figure 1-5.

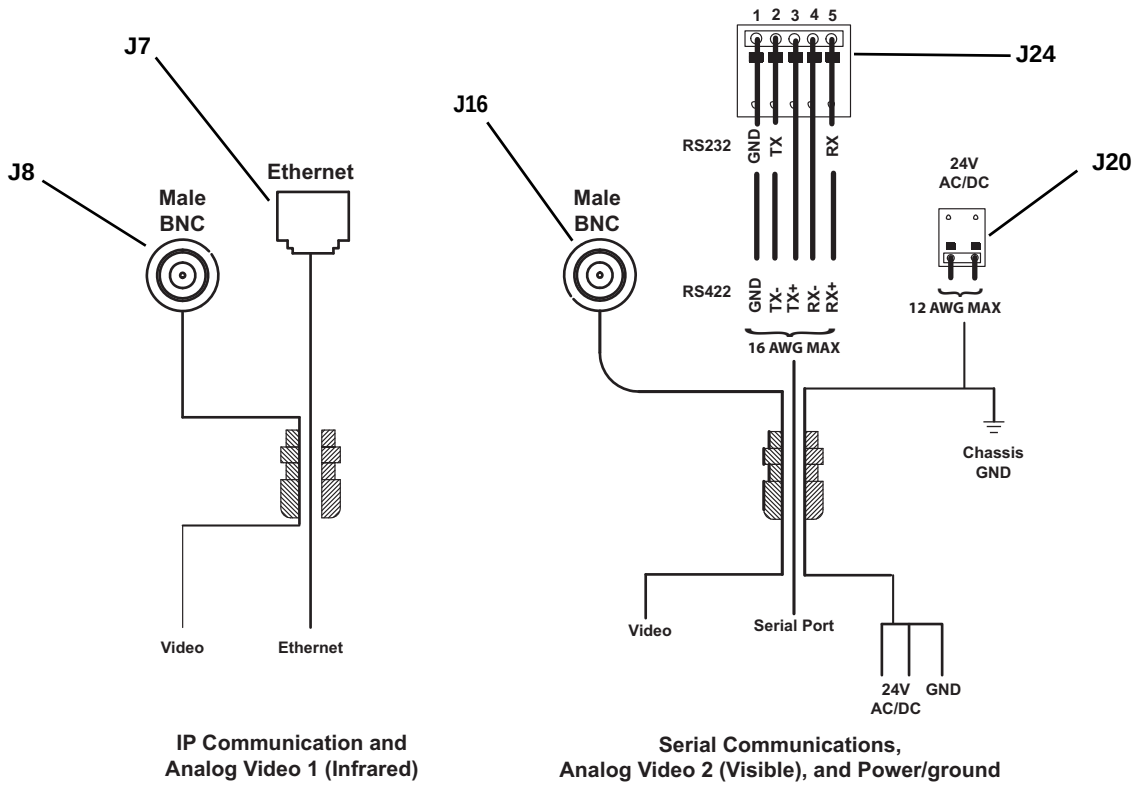

Figure 1-4: D-Series Cable Connections

1.7.4 Connector Signal Description

Power J20

Pin	Signal Name	Description
1	Line	24V AC/DC
2	Neutral	24V AC/DC

Ethernet J7

Standard RJ45 - 10/100

Pin[a]	Signal Name	Direction
A1	ETH_TX+	Out
A2	ETH_TX-	Out
A3	ETH_RX+	In
A4	NC	
A5	NC	
A6	ETH_RX-	In
A7	NC	
A8	NC	

a. Pins not listed are not connected.
NC = not connected.

Comm Port - J24

J24 Pin	Signal Name—RS232	Signal Name—RS422
1	GND	GND
2	TX	TX-
3		TX+
4		RX-
5	RX	RX+

Video 1 J8 (Infrared) and Video 2 J16 (Visible)

Standard F connector with elbow adapter and F-plug-to-BNC-jack—Analog video out.

Note

A right angle elbow adapter and mating F-plug-to-BNC-jack connector provide the female BNC connection for the video cables as shown in Figure 1-5.

1.7.5 Opening the Electronics Enclosure

Use a 7/16" wrench to loosen the six captive 1/4-20 hex head cap screws and swing open the electronics enclosure, exposing the connections at the back.

Ensure the system is properly grounded. Typical to good grounding practices, the chassis ground should be provided using the lowest resistance path possible. FLIR requires using a grounding strap anchored to the ground lug on the Surge board of the enclosure and connected to the nearest earth-grounding point.

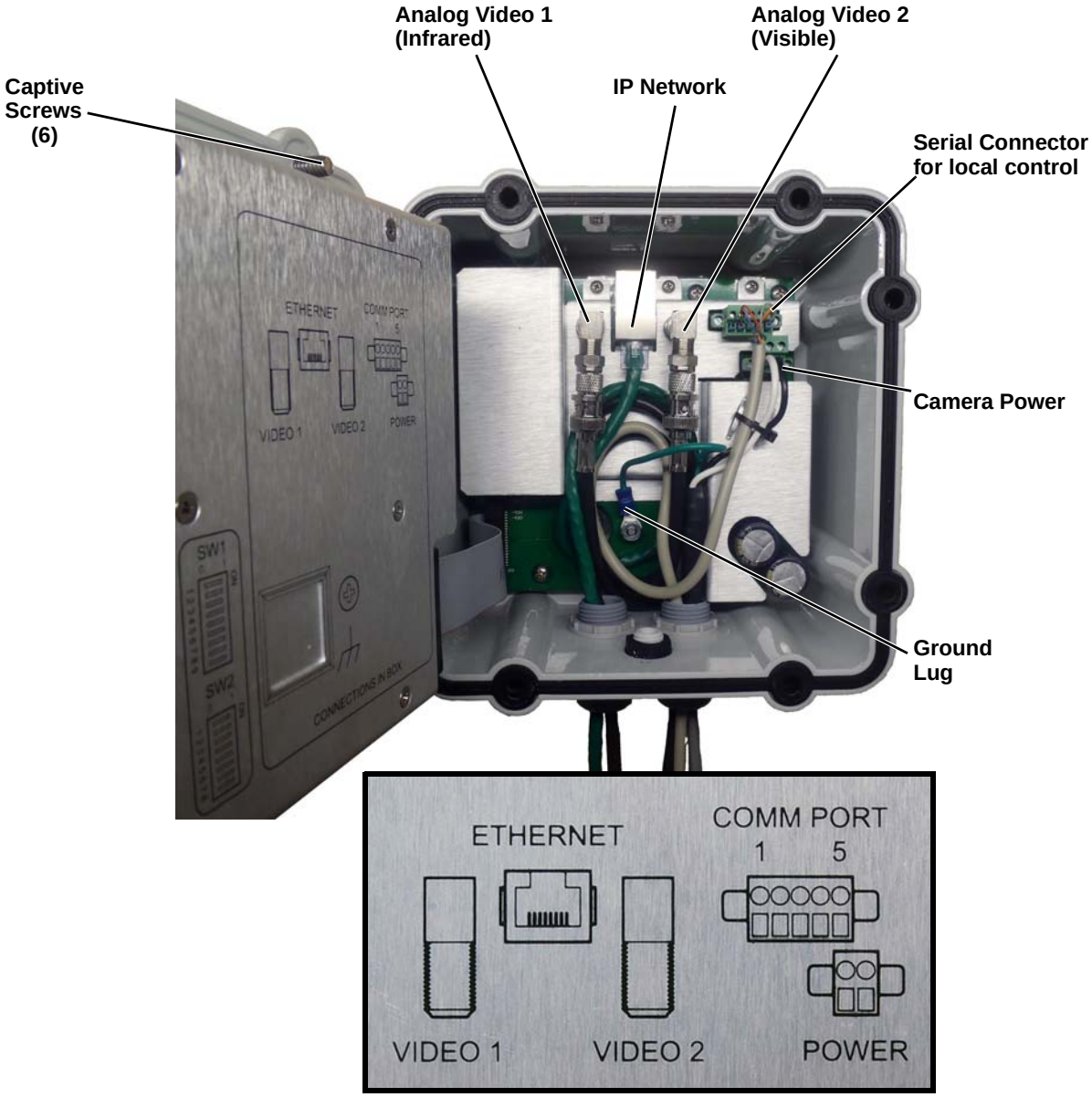

Figure 1-5: D-Series Camera Connections

1.7.6 Connecting power

The camera itself does not have an on/off switch. Generally the D-Series camera will be connected to a circuit breaker and the circuit breaker will be used to apply or remove power to the camera. If power is supplied to it, the camera will be in one of two modes: Booting Up or Powered On.

The power cable supplied by the installer must use wires that are sufficient size gauge for the supply voltage and length of the cable run, to ensure adequate current carrying capacity. Always follow local building codes!

Note

> The terminal blocks for power connections will accept a maximum 12 AWG wire size.

1.7.7 Video Connections

Both analog video connections for the camera are BNC connectors.

The video cable used should be rated as RG59U or better to ensure a quality video signal.

1.7.8 Ethernet Connection

The cable gland seal is designed for use with Shielded Category 6 Ethernet cable.

1.7.9 Serial Connections

The camera supports RS-422 and RS-232 serial communications using common protocols (Pelco D, Bosch). For configuration settings see paragraph 1.7.10 “Setting Configuration Dip Switches” on page 1-11.

Note

> The terminal blocks for serial connections will accept a maximum 16 AWG wire size.

1.7.10 Setting Configuration Dip Switches

The figure below shows the locations of dip switches SW 1 and SW 2.

Pelco Address: This is the address of the system when configured as a Pelco device. The available range of values is from decimal 0 to 255.

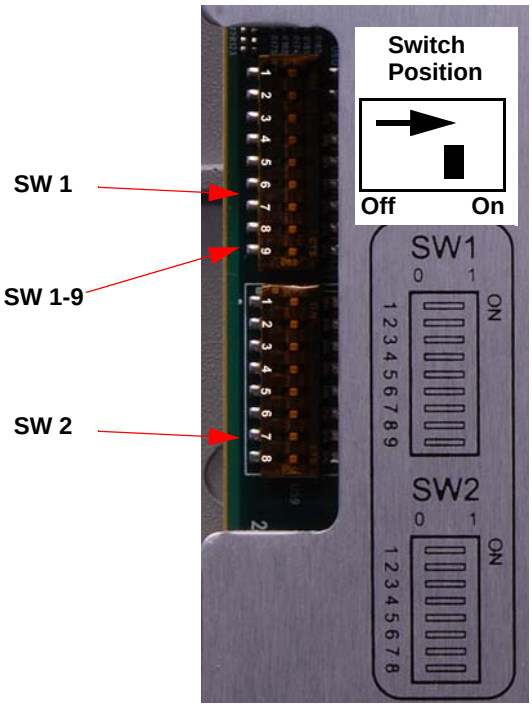

Figure 1-6: D-Series Camera Configuration

Note

From the factory, switch SW 1-9 (Software Override DIP Switch) is set to Off.This setting determines that software settings will override the dip switch settings. If you wish to use the dip switches for configuration, you must set SW 1-9 to the On position.

Table 1-1: Dip Switch Address/ID Settings—SW 2

ID	Bit 1	Bit 2	Bit 3	Bit 4	Bit 5	Bit 6	Bit 7	Bit 8
0	OFF	OFF	OFF	OFF	OFF	OFF	OFF	OFF
1	ON	OFF	OFF	OFF	OFF	OFF	OFF	OFF
2	OFF	ON	OFF	OFF	OFF	OFF	OFF	OFF
3	ON	ON	OFF	OFF	OFF	OFF	OFF	OFF
...	...	...	...	...	...	...	...	...
255	ON	ON	ON	ON	ON	ON	ON	ON

Other Serial Communications Parameters. The tables below defines the switch locations, bit numbering and on/off settings.

Table 1-2: Dip Switch Settings—SW 1

Switch octaves	Settings		Description
Baud rate: This is the baud rate of the system user serial port. The available values are 2400, 4800, 9600, 19200 kbaud.	**Bit 1**	**Bit 2**	
	OFF	OFF	2400
	ON	OFF	4800
	OFF	ON	9600
	ON	ON	19200
Camera Control Protocol: This is the communication protocol selected for the system when operating over the serial port. The available protocols are Pelco-D and Bosch.	**Bit 3**	**Bit 4**	
	OFF	OFF	Pelco-D
	ON	OFF	NA
	OFF	ON	Bosch
	ON	ON	NA
Serial Communication Standard: This determines the electrical interface selected for the user serial port. The available settings are RS422 and RS232.	**Bit 5**	**Bit 6**	
	OFF	OFF	NA
	ON	OFF	RS422
	OFF	ON	RS232
	ON	ON	N/A
Not Used	**Bit 7**	**Bit 8**	
	X	X	
	X	X	
	X	X	
	X	X	
Software Override DIP Switch: This setting determines whether the system will use software settings for configuration or if the dip switch settings will override the software settings. Default is Off.	**Bit 9**		
	OFF		Software select
	ON		Hardware select

1.8 D-Series Camera Specifications

Pan and Tilt Multi-Sensor Dome

THERMAL CAMERA SPECS		
Detector Type	Uncooled VOx Microbolometer	
Resolution	320 x 240	640 x 480, 9 Hz Frame Rate
Pixel Pitch	25 µm	17 µm
Focal Length (lens/model dependent)	9 mm, 13 mm, 19 mm 35 mm	13 mm, 25 mm, 35 mm
Field Of View (lens/model dependent)	48° x 39° (D-348; 9 mm) 34° x 28° (D-334; 13 mm) 24° x 19° (D-324; 19 mm) 13° x 10° (D-313; 35 mm)	45° x 37° (D-645; 13 mm) 25° x 20° (D-625; 25 mm) 18° x 14° (D-618; 35 mm)
Zoom (model dependent)	2x E-zoom	2x, 4x E-zoom
Spectral Range	7.5 µm to 13.5 µm	
Focus Range	Athermalized, Fixed focus	
DAY/NIGHT CCD CAMERA	Sony FCB-EX1010	
Sensor Type	1/4" Exview HAD CCD	
Lens Field Of View	57.8° (h) to 1.7° (h)	
Focal Length	3.4 mm to 122.4 mm	
Zoom	36x Optical zoom, 12x E-zoom	
F/#	1.6 to 4.5	
Effective pixels (NTSC)	380,000	
Composite Video NTSC or PAL	Standard	
Video Over Ethernet	Two independent channels of streaming MPEG-4, H.264, or M-JPEG for each of two cameras.	
CONTROL		
Point To Point (stand alone)	Standard	
Ethernet	Standard	
Serial	RS-232/-422; Pelco D, Bosch	
Network Enabled	Standard	
PAN/TILT PERFORMANCE		
Pan Angle/Speed	Continuous 360°; 0.5° to 60°/sec	
Tilt Angle/Speed	+25° to -90°; 0.5° to 60°/sec	
GENERAL		
Weight	~25 lb (configuration dependent)	
Dimensions (L,W,H)	18.54" x 7.82" x 21.88" (471 mm x 199 mm x 556 mm)	
Power Requirements	24 VAC (21-30 VAC) 24 VDC (21-30 VDC)	
Power Consumption	24 VAC: 80 VA max 24 VDC: 60 W max	
Inrush Current	<10 A for DC power supply with slew rate > 10 ms <38 A for AC power supply with slew rate > 4.17 ms	
ENVIRONMENTAL		
Dust, Water Protection Rating	IP56	
Operating Temperature	-32°C to +55°C (-26°F to +131°F)	
Storage Temperature	-40°C to +85°C (-40°F to +185°F)	

2 Verify Camera Operation

Prior to installing the camera, use a bench test to verify camera operation and configure the camera for the local network. The camera provides two analog video streams and can be controlled through either serial or IP communications providing streaming video over an IP network.

2.1 Power and analog video

Step 1 Connect the power, video, and serial cables to the camera as described in paragraph 1.7 “Electrical Connections and Schematics” on page 1-6.

Step 2 Connect the video cables from the camera to a display/monitor and connect the power cable to a power supply.
The camera operates on 21 - 30 VAC or 21 - 30 VDC.
Verify that video is displayed on the monitor.

Step 3 Connect the serial cable from the camera to a serial device such as a keyboard, and confirm that the camera is responding to serial commands.

Before using serial communications, it may be necessary to configure the serial device interface to operate with the camera. When the camera is turned on, the video temporarily displays system information including the serial number, IP address, Pelco address, Baud rate, and setting of the serial control DIP switch: SW - software control (the default) or HW - hardware.

S/N: 1234567
IP Addr: 192.168.250.116
PelcoD (Addr:1): 9600 SW

2.2 Verify IP Communications

As shipped from the factory, the D-Series camera has an IP address of 192.168.250.116 with a netmask of 255.255.255.0.

Step 1 Configure a laptop or PC with another IP address from this network (for example, 192.168.250.1).

Step 2 Connect the camera and the laptop to the same Ethernet switch (or back-to-back with an Ethernet crossover cable).[1]

Step 3 Open a web browser, enter **http://192.168.250.116/index_default.html** in the address bar, and press Enter.

1. In some cases, a straight Ethernet cable can be used, because many PCs have auto-detect Ethernet interfaces.

The Web Configuration tool will show the Welcome screen at the right.

Step 4 Click the link to Select Config File and set the configuration as shown below.

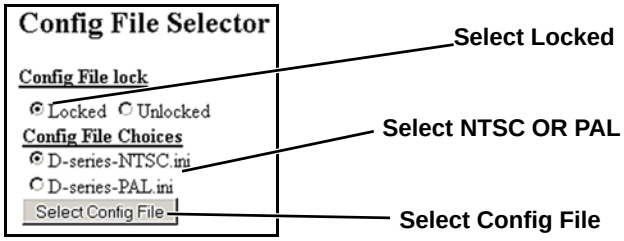

Step 5 Cycle power to the camera so that the selected configuration file is loaded.

Step 6 After the camera is finished booting up, set your web browser to **http://192.168.250.116** in the address bar, and press Enter.

The Web Configurator will start at the Login screen. If the Login screen appears, then you have established IP communications with the camera. It is not necessary to log in and use the Web Configuration tool right away. At this time, perform a bench test of the camera using the FLIR Sensors Manager software and the factory configured IP address. Refer to paragraph 2.3 “Using FLIR Sensors Manager (FSM)” on page 2-3.

2.3 Using FLIR Sensors Manager (FSM)

The following provides a brief description of how to use FSM to control a camera and stream video from the camera. For more detailed information on how to use FSM, refer to the FLIR Sensors Manager User Manual.

If the FSM software has not been installed yet, locate the CD that came with the camera and install it on the PC.

2.3.1 Running FSM

Step 1 Run the FSM software by double clicking the icon on the desktop, or click on the Windows Start button and select Programs > FLIR Sensors Manager > FLIR Sensors Manager.

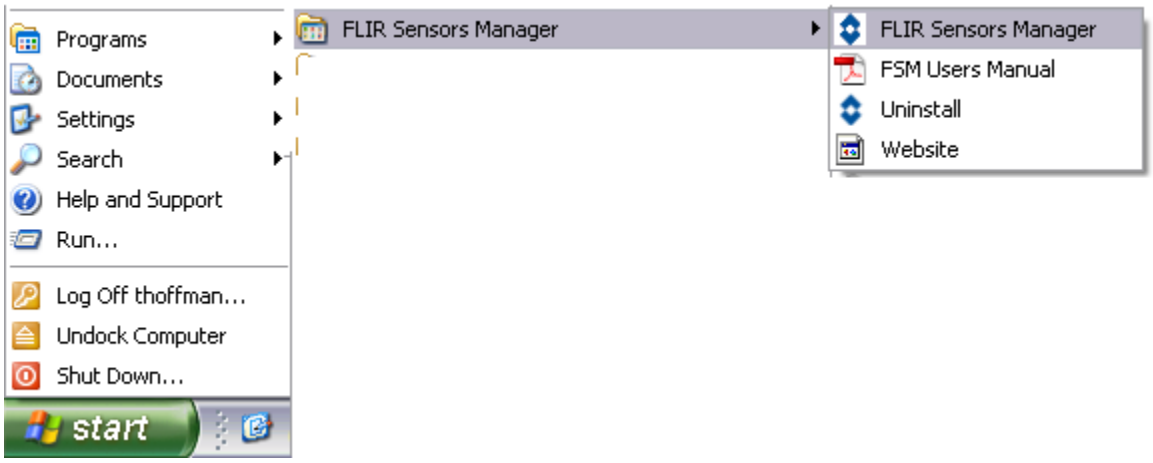

Initially the FLIR Sensors Manager splash screen will be displayed. The software version may be different than the version displayed below.

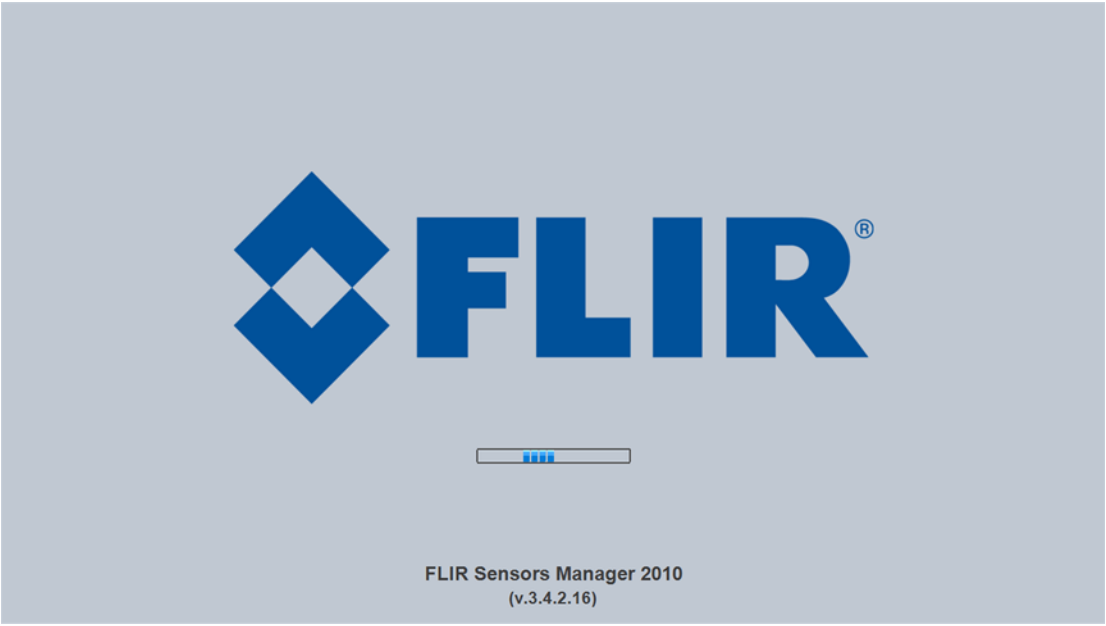

After a brief while, the FSM main window will appear. A popup FSM Notification window will appear in the lower right of the screen indicating that no cameras (servers) have been discovered yet.

Step 2 Click on the Accept button to acknowledge the notification.

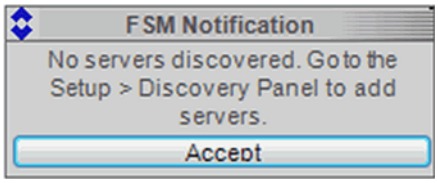

The FLIR Sensors Manager uses a “client/server” architecture. The FSM software is considered a client, and the cameras are considered servers or sensors.

The Sensors Panel in the upper left of the window indicates no sensors have been discovered and added to the list of Active Sensors.

Step 3 Click on **Setup**, if required, then the **Discovery** button on the side panel to bring up the Discovery Panel. The FSM software can automatically discover FLIR cameras on the network.

Step 4 When the Discovery Panel is displayed, click Refresh.
The FLIR camera will appear in the list of Discovered Servers. The camera will be called “flir”, and the asterisk in parenthesis “(*)” indicates the camera has not been added to the list of Active Servers on the right.

Step 5 Click on the center bar “>” to move the camera over to the list of Active Servers.

By default, the FSM software will automatically discover sensors in the network, connect to the first camera it finds, take control of the camera, and display the video from the camera in Video Wall 0.

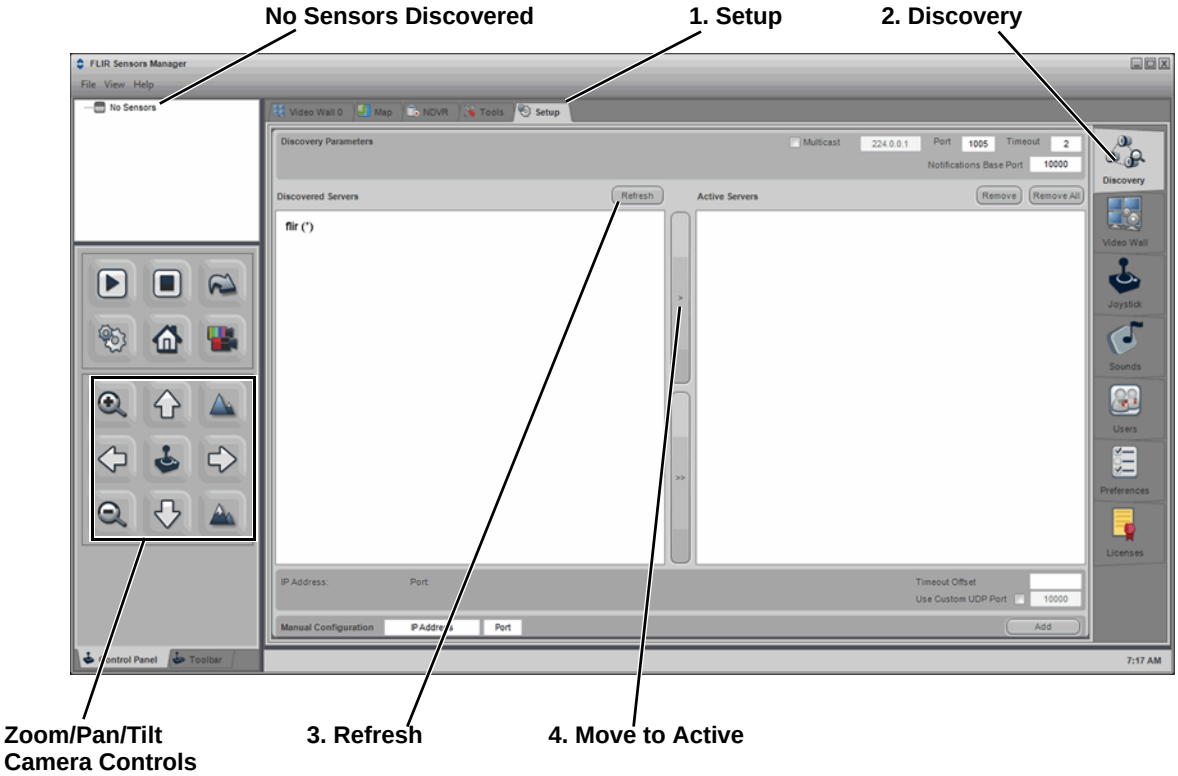

Step 6 Confirm that video is streamed to the monitor and it is possible to control the camera using the zoom controls and so on. For example, click on the zoom button (magnifying glass with +), and the video will zoom to 2X. Once operation of the camera has been confirmed, the camera can be configured to an IP address that matches the installation network.

Step 7 Return to the Web Configurator screen shown at the right and enter **basic** as the User and click **Login**.
No password is required.

The Web Configurator will display the Help screen listing information on the camera's software and hardware configuration.
The menu on the left allows you to select various configuration web pages in order to set the camera parameters. See "D-Series Configuration" on page 2-6.

2.4 D-Series Configuration

After logging in, the Help screen is displayed. This screen has information about the camera including hardware and software revision numbers, part numbers, and serial numbers. If you need to contact FLIR for support, this information will be useful to the support engineer. Use the Menu entries at the left of the screen shown in Figure 2-1 to configure the D-Series camera.

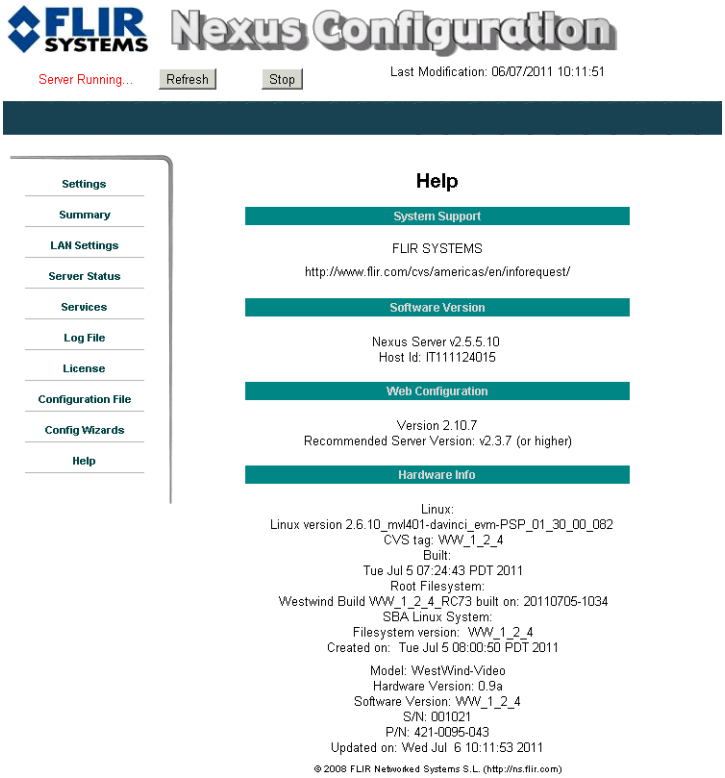

Figure 2-1: Web Configurator Help Screen

The following paragraphs show the pages for setting serial communication parameters and setting a new IP address for a camera on a local area network.

2.4.1 Set the Date and Time

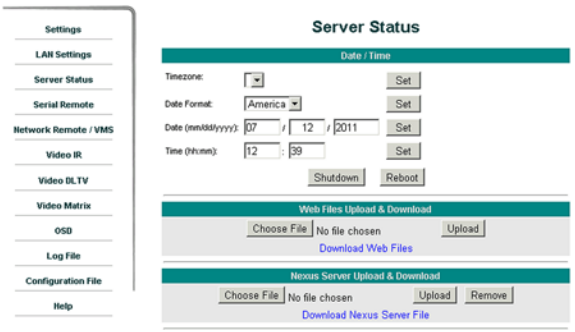

Step 1 Click **Server Status**. The screen at the right will be displayed.

Step 2 Set the Timezone from the pull down menu. Click **Set**.

Step 3 Set the Date Format from the pull down menu. Click **Set**.

Step 4 Set the Date by typing in the dialog boxes. Click **Set**.

Step 5 Set the Time by typing in the dialog boxes. Click **Set**.

2.4.2 Serial Remote Menu

The settings you make in this screen will become active when the software override DIP switch is set to Off (the default) allowing software settings to control the camera. Refer to paragraph 1.7.10 “Setting Configuration Dip Switches” on page 1-11.

Step 1 Click **Serial Remote**. The screen at the right will be displayed.

Step 2 Select the Protocol for your serial control configuration (**Pelco-D Serial Remote** in this example).

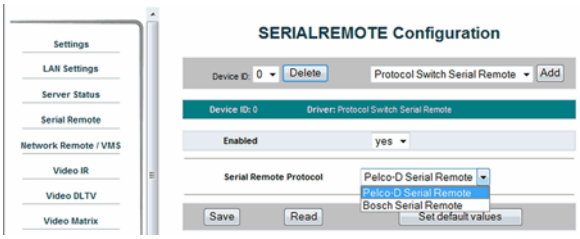

Step 3 Select Device ID: **1** to see the Pelco-D advanced settings. (If you selected Bosch Serial Remote in 2 above, you will select Device ID: **2** to see the Bosch advanced settings.)

Step 4 Enter the parameters for your specific location.

Step 5 Scroll down to see more advanced settings.

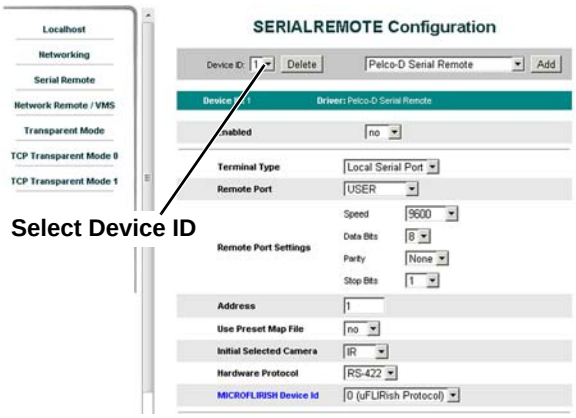

Scanlist Serial Control

Step 1 Scroll down until you see the Advanced Settings section shown in the screen at the right.

Step 2 Enter the scanning parameters for your specific location.

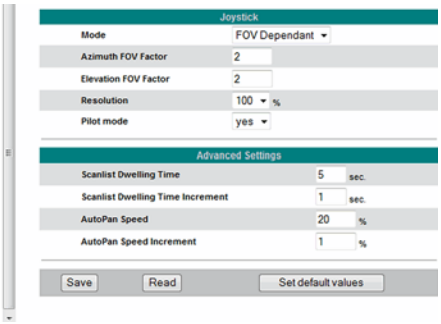

2.4.3 Digital Video Configuration—Video IR and Video DLTV

Note

> When defining the ports for digital video, streams are setup sequentially; 0, 1, 2, and 3. If a stream is enabled, the server will use the RTP/RTSP over HTTP port parameter to define the port number (if left blank, 8080 is used). A subsequent stream's configuration takes precedence so the same port needs to be defined for all enabled video streams. (But actually you could really only define a non-default port for the last video stream configured.)

Step 1 Click **Video IR**. The screen at the right will be displayed.

Step 2 Enter the parameters for your IR video stream.

The IR Stream Name contains the connection string for the IP video. The default value recognized by FSM as ch0 is: rtsp://192.168.250.116/ch0. Enter the appropriate IP video connection string for your installation.

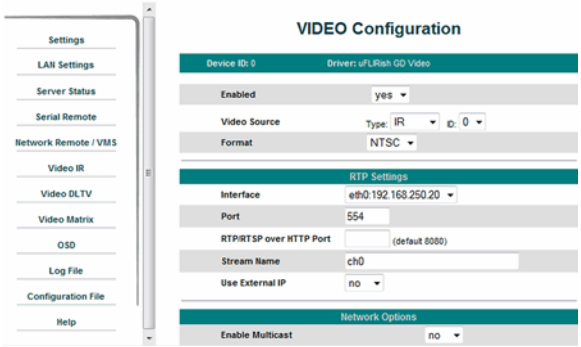

Step 3 Click **Video DLTV**. The screen at the right will be displayed.

Step 4 Enter the parameters for your Visible video stream.

The DLTV Stream Name contains the connection string for the IP video. The default value recognized by FSM as ch2 is: rtsp://192.168.250.116/ch2. Enter the appropriate IP video connection string for your installation.

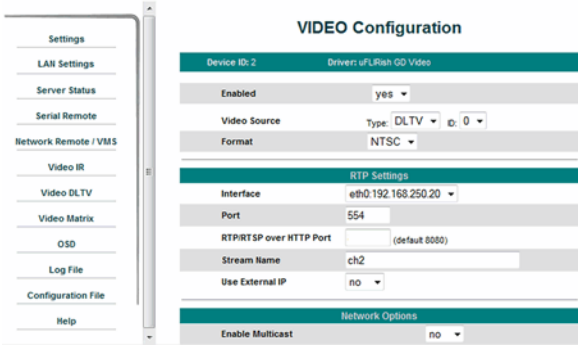

2.4.4 Configuration File

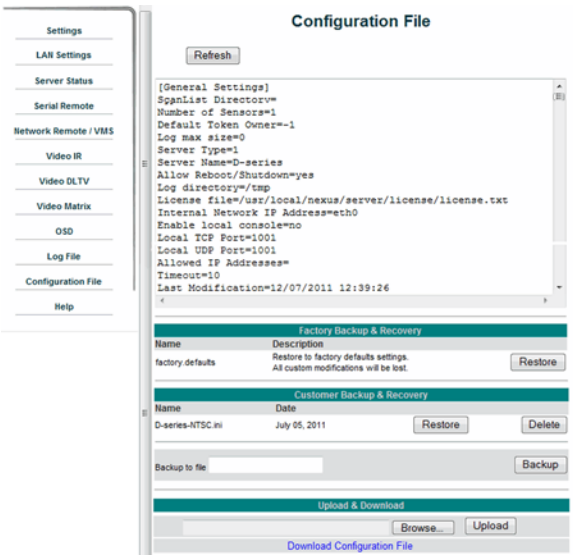

Step 1 Click **Configuration File**. The screen at the right will be displayed.

Shown at the top of the screen is the .ini file in a scrollable window. This can help if you ever need help from a support engineer.

Step 2 Click **Restore** in the Factory Backup and Restore section to reconfigure the file to the settings sent from the factory. This file can not be modified or deleted, so it is always available.

Step 3 In the Customer Backup and Recovery section, make a backup of your final custom settings.

Step 4 In the Upload and Download section, download a copy to a different network location for safe keeping.

2.4.5 LAN Settings

As the final step in configuring the camera on the bench, you may want to insert a new IP address appropriate for the local area network receiving the camera. Once you are finished with this process you typically will no longer be able to access the camera from the same PC used to see the default IP address.

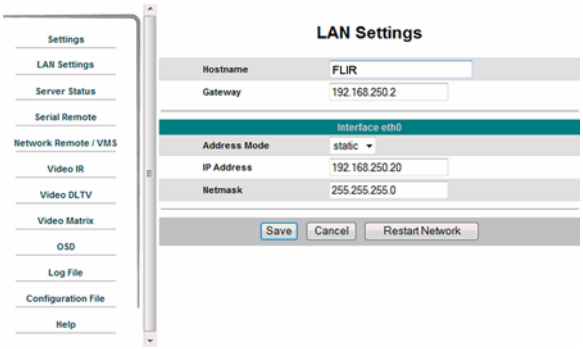

Step 1 Click **LAN Settings**. The screen at the right will be displayed.

Step 2 Enter the Hostname, Gateway, IP Address, and Netmask that are appropriate for the local area network. Click Save.

If you change to a new IP address and the browser can no longer communicate with the camera, You must connect the camera to an appropriate local area network (LAN) and connect to the camera using its new IP address.

A Mechanical ICD Reference

The Mechanical Interface Control Document details the outline and mounting for the D-Series cameras. These documents are provided for reference only. You should consult your local sales representative or application engineer to obtain current ICD information. Also, the D-Series Thermal Imaging Camera Core Data Sheet available from the website contains important mechanical interface data as well.

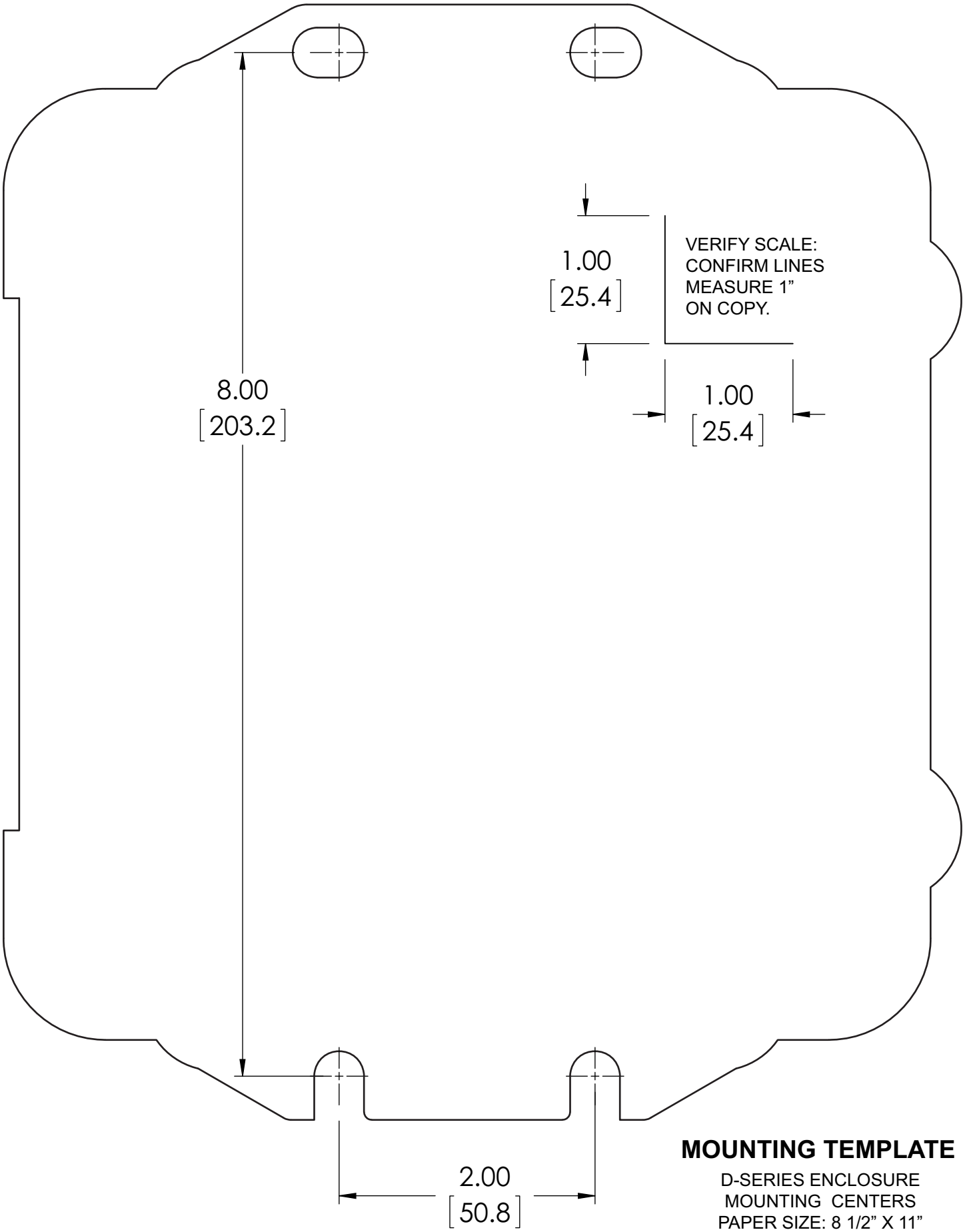

MOUNTING TEMPLATE

D-SERIES ENCLOSURE
MOUNTING CENTERS
PAPER SIZE: 8 1/2” X 11”

NOTES: UNLESS OTHERWISE SPECIFIED

1. COMPLETED ASSEMBLED WEIGHT = 23 LBS (10.4 KILOGRAMS).

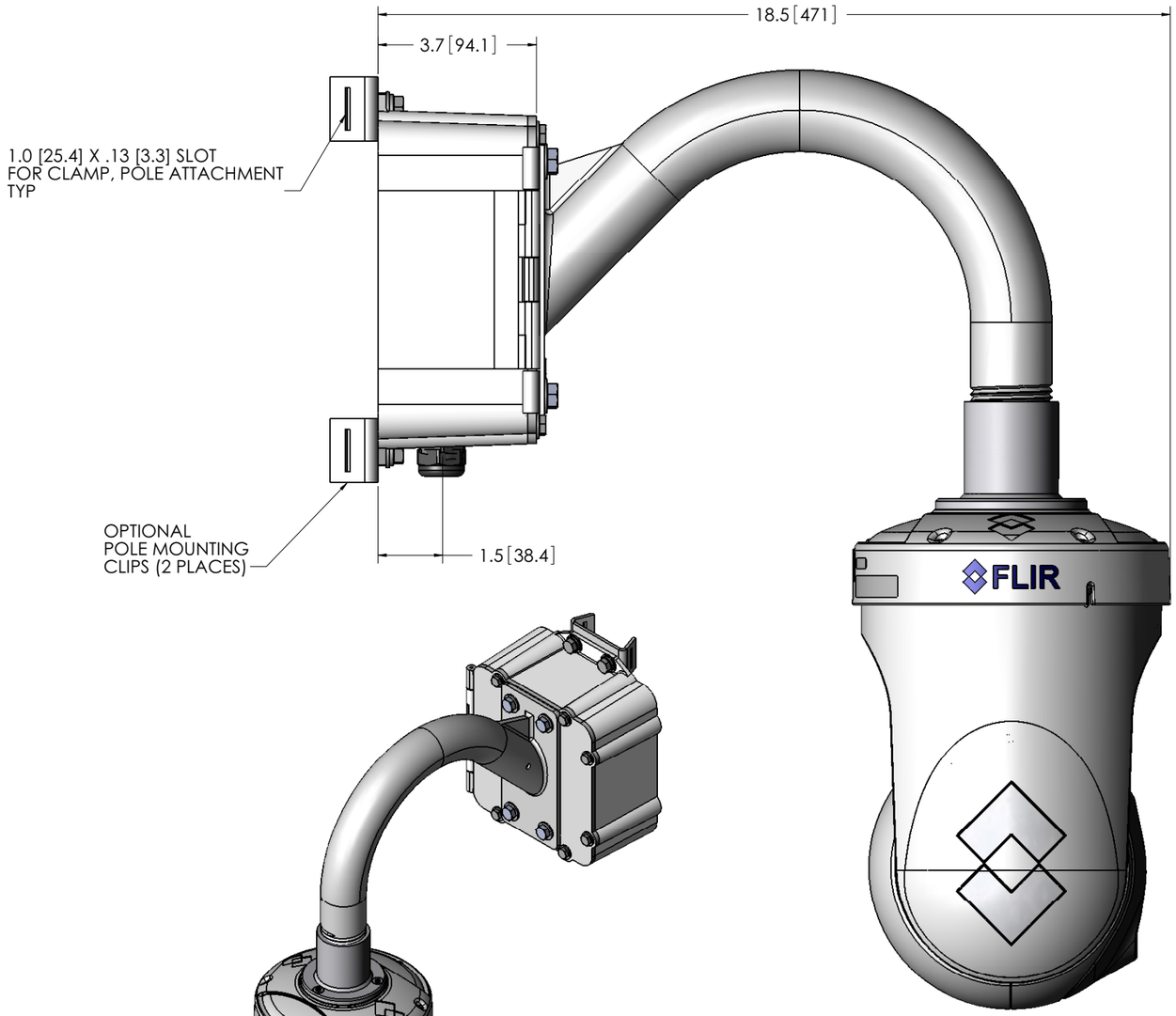

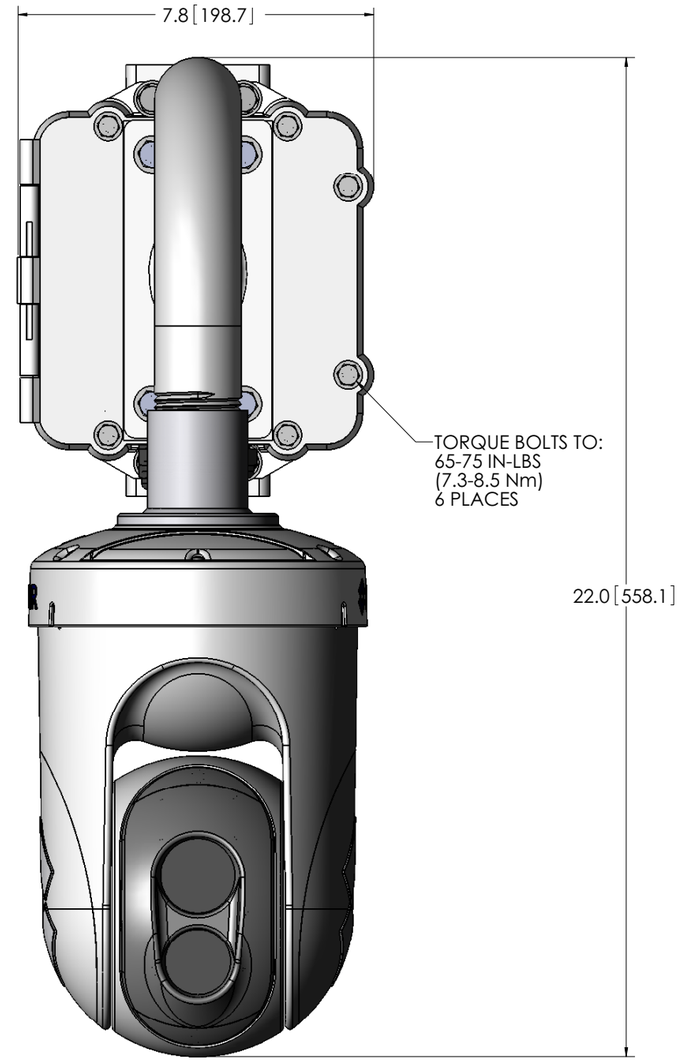

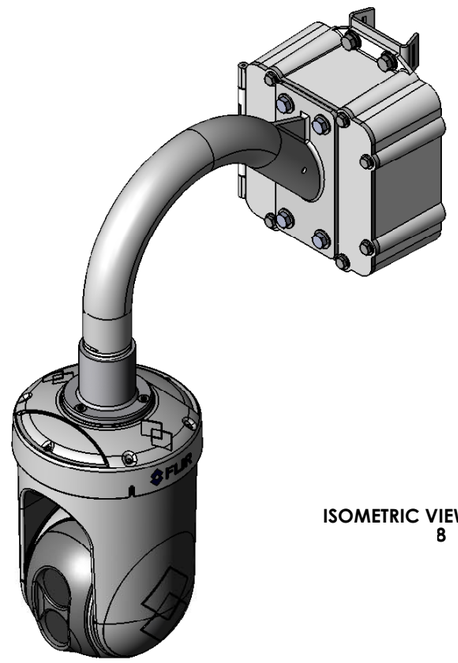

ISOMETRIC VIEW
B

D-Series Camera Mechanical Interface Control Document Sheet 1

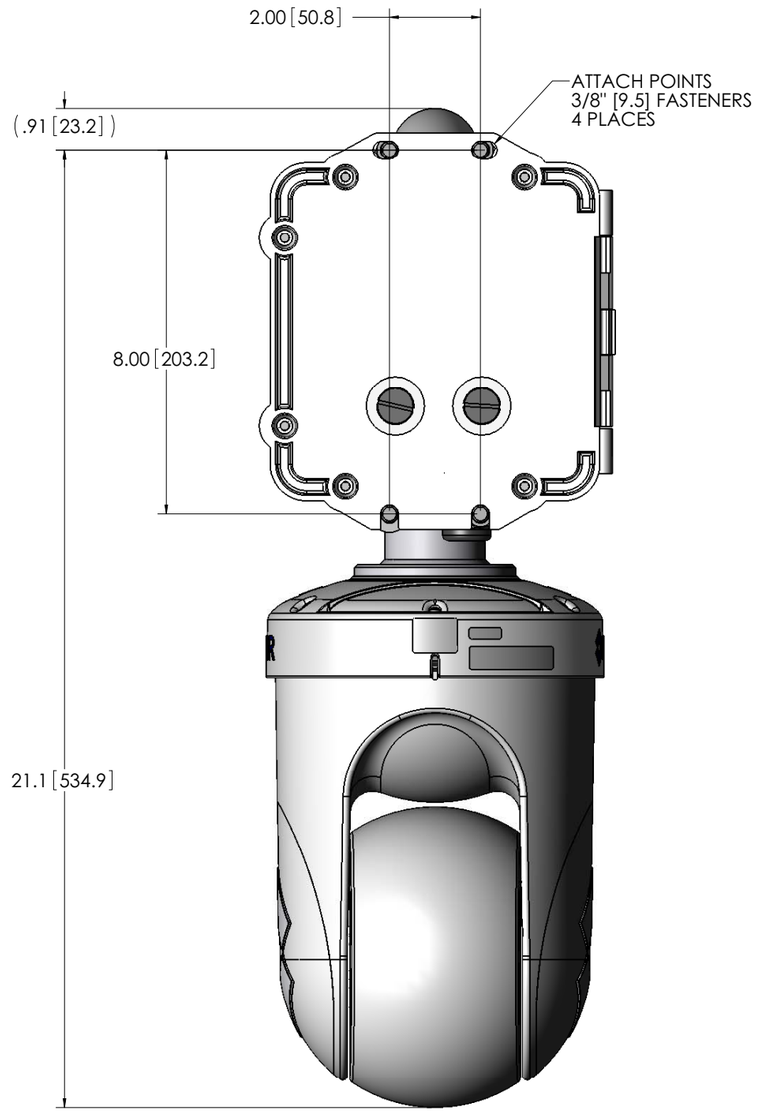

BACK VIEW

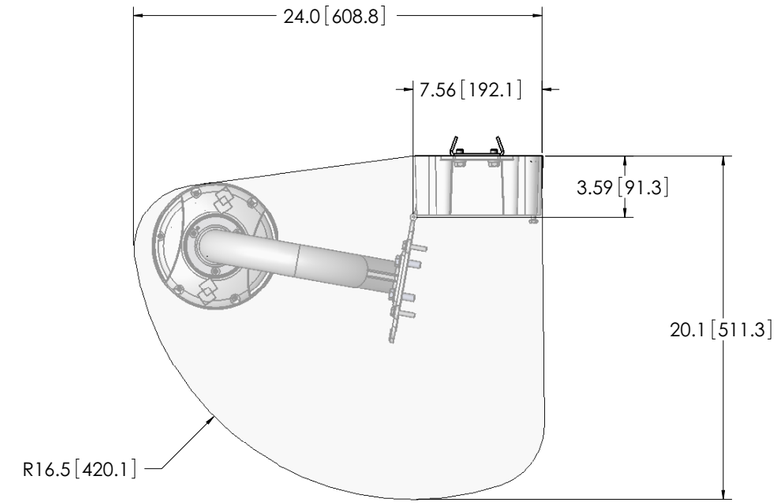

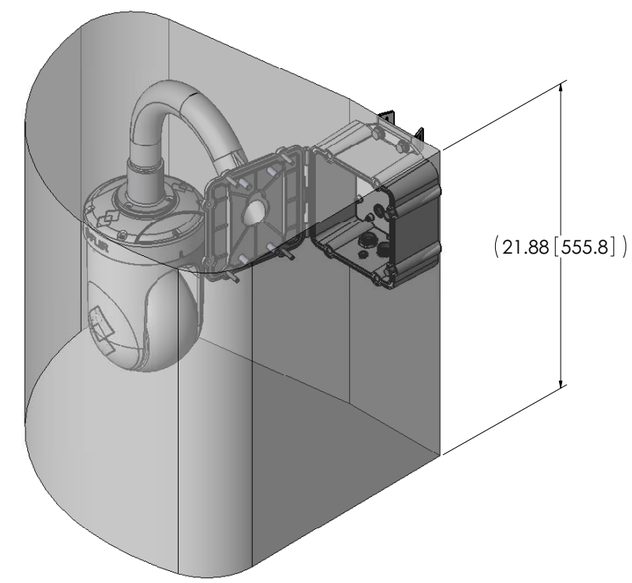

REQUIRED MINIMUM CLEARANCE
TO ACCOMMODATE OPENING
DOOR

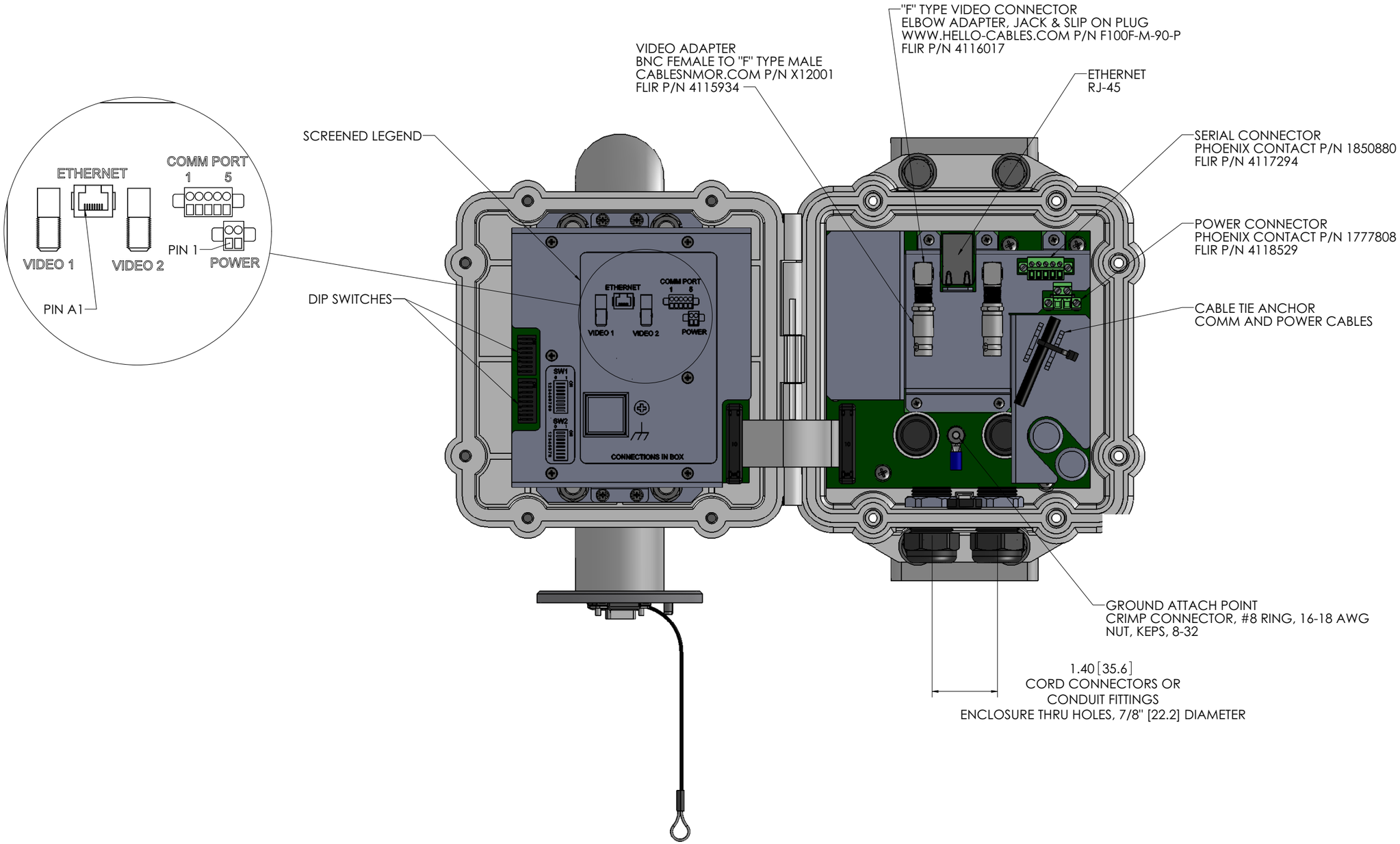

ENCLOSURE-CAMERA MOUNT ASSY
D-SERIES

D-Series Camera Mechanical Interface Control Document Sheet 3

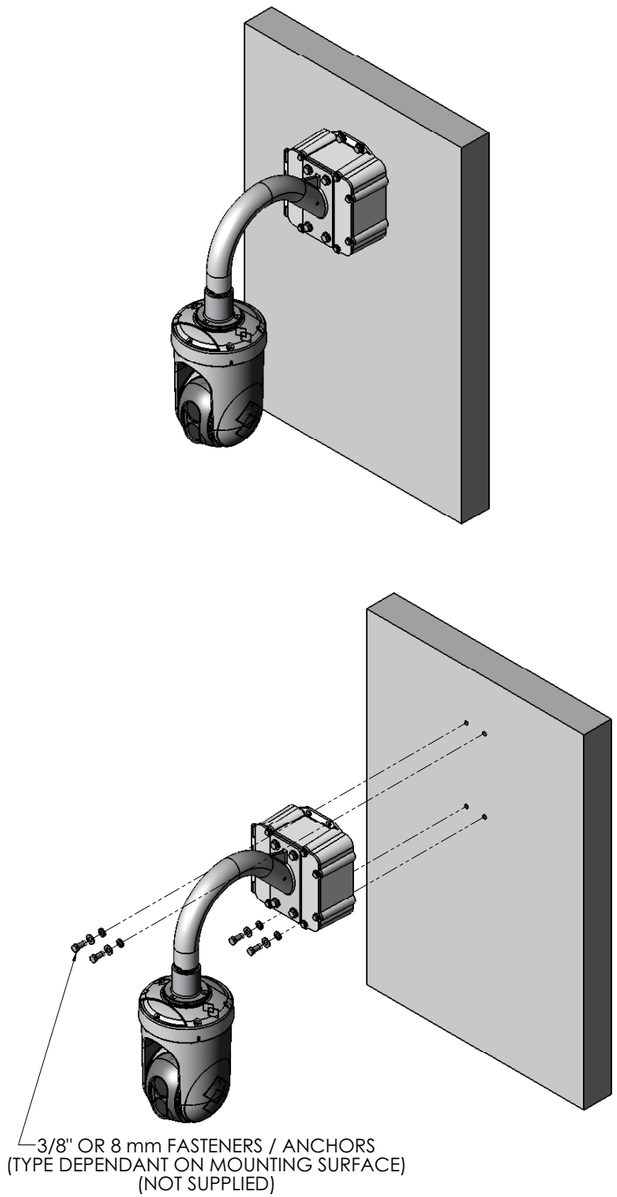

WALL MOUNT OPTION

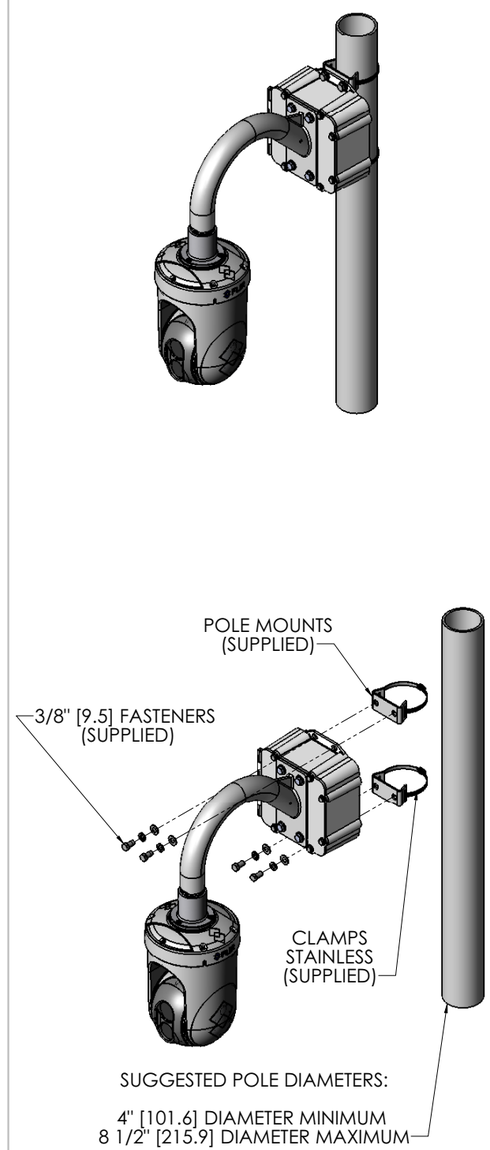

POLE MOUNT OPTION

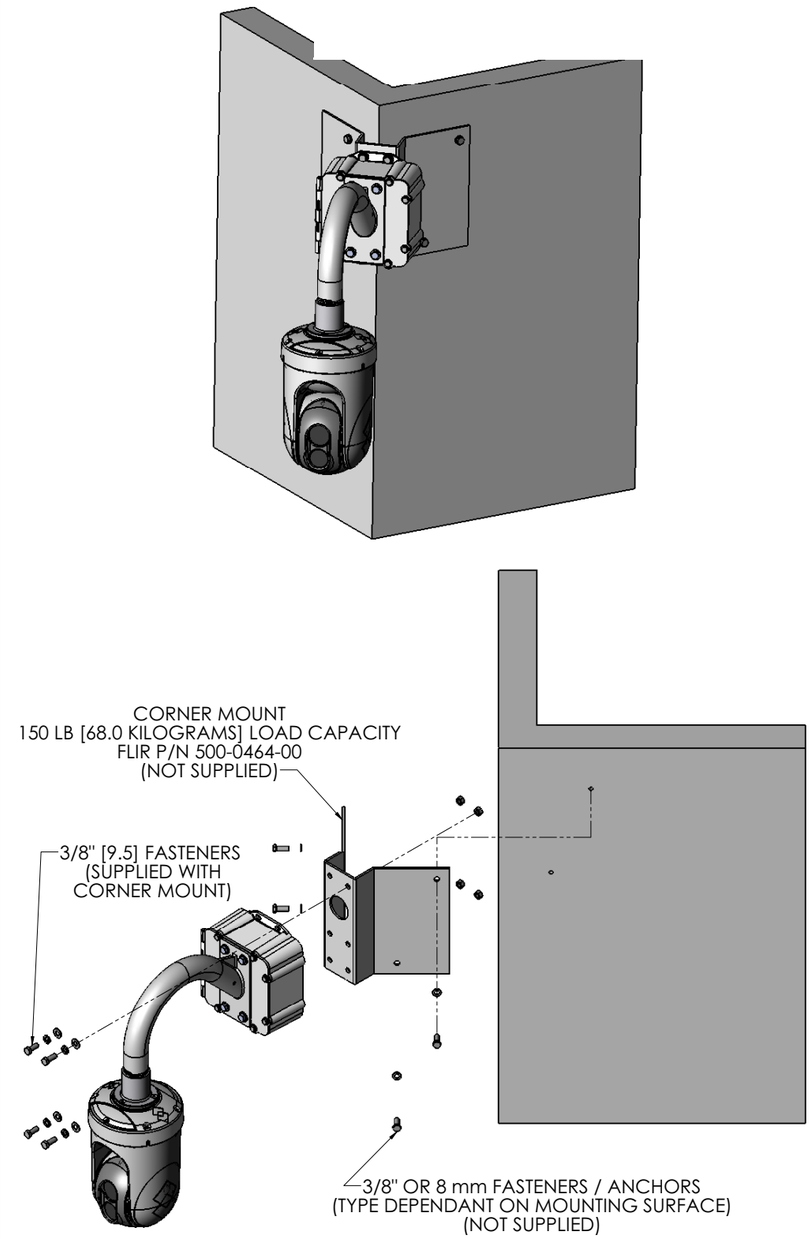

CORNER WALL MOUNT OPTION

D-Series Camera Mechanical Interface Control Document Sheet 4